University *of Ljubljana*
Faculty *of Mechanical Engineering*



DEVELOPMENT EVALUATIONS

Lecture Templates

Marko Nagode, Simon Oman, Domen Šeruga
University of Ljubljana, Faculty of Mechanical Engineering
Aškerčeva 6, SI-1000 Ljubljana, Slovenia

25. Februry 2019

Contents

1 Introduction **1**
- 1.1 Concepts, Terms and Definitions . . . 3
- 1.2 Product Attributes . . . 5
- 1.3 Basic Time Divisions . . . 6
- 1.4 Effectiveness and Costs . . . 7

2 Basic Reliability Models **9**
- 2.1 The Failure Distribution . . . 9
- 2.2 Mean Time to Failure . . . 11
- 2.3 Hazard Rate Function . . . 12
- 2.4 Bathtub Curve . . . 12
- 2.5 Conditional Reliability . . . 13
- 2.6 Probability Models . . . 13
  - 2.6.1 The Exponential Distribution . . . 13
  - 2.6.2 The Weibull Distribution . . . 14
  - 2.6.3 The Normal Distribution . . . 15
  - 2.6.4 The Log-normal Distribution . . . 16

3 Reliability of Systems **17**
- 3.1 Series and Parallel Configurations . . . 18
- 3.2 Parallel configurations k out of n . . . 18
- 3.3 Combined Series-Parallel Systems . . . 19
- 3.4 Complex Configurations . . . 19
  - 3.4.1 Decomposition . . . 20
  - 3.4.2 Enumeration . . . 21
  - 3.4.3 The System Structure Function . . . 21
  - 3.4.4 Coherent Systems . . . 22
  - 3.4.5 Minimal Path and Cut Sets . . . 23
  - 3.4.6 System Bounds . . . 24
- 3.5 Low and High Level Redundancy . . . 24
- 3.6 Three State Devices . . . 25
  - 3.6.1 Series Structure . . . 25
  - 3.6.2 Parallel Structure . . . 26

3.6.3 Low Level Redundancy . . . 26
3.6.4 High Level Redundancy . . . 27

4 State Dependent Systems 29
4.1 Markov Analysis . . . 29
4.2 Load Sharing Systems . . . 32
4.3 Standby Systems or Passive Parallel Configurations . . . 32
4.4 Passive Parallel System of Identical Components . . . 33
4.5 Standby Systems with Switching Failure . . . 34
4.6 Degraded Systems . . . 35
4.7 Three State Devices . . . 35

5 Physical Reliability Models 37
5.1 Covariate Models . . . 37
5.2 Static Models . . . 38
5.3 Dynamic Models . . . 40
5.3.1 Periodic Loads . . . 40
5.3.2 Random Loads . . . 41
5.3.3 Random Fixed Stress and Strength . . . 41
5.4 Physics of Failure Models . . . 42

6 Design for Reliability 43
6.1 Reliability Objectives . . . 44
6.1.1 Life Cycle Costs . . . 45
6.2 Reliability Allocation . . . 45
6.2.1 Exponential Case . . . 46
6.2.2 Optimal allocation . . . 46
6.2.3 ARINC Method . . . 47
6.2.4 AGREE Method . . . 47
6.2.5 Redundancies . . . 48
6.3 Design Methods . . . 49
6.3.1 Parts and Material Selection . . . 49
6.3.2 Derating . . . 49
6.3.3 Stress Strength Analysis . . . 50
6.3.4 Complexity and Technology . . . 51
6.3.5 Redundancy . . . 51
6.4 Failure and Effect Analysis . . . 52
6.4.1 Review of the Process . . . 53
6.4.2 Identification of the Potential Failure Modes . . . 55
6.4.3 Identification of Potential Effects of Each Failure Mode . . . 55
6.4.4 Assigning a Severity Rating for Each Failure Mode . . . 55
6.4.5 Assigning an Occurrence Rating for Each Failure Mode . . . 57

6.4.6 Assigning a Detection Rating for Each Failure Mode and/or Effect . . . 57
6.4.7 Calculation of the Risk Priority Numbe . . . 57
6.4.8 Prioritizing the Failure Modes for Action . . . 58
6.4.9 Taking Action to Eliminate or Reduce the High Risk Failure Modes . . . 58
6.4.10 Calculation of the Resulting RPN . . . 58
6.5 System Safety and Fault Tree Analysis . . . 59
6.5.1 Fault Tree Analysis . . . 59
6.5.2 Minimal Cut Sets . . . 61
6.5.3 Quantitative Analysis . . . 62

7 Maintainability **63**
7.1 Analysis of Downtime . . . 63
7.2 The Repair Time Distribution . . . 64
7.3 System Repair Time . . . 65
7.4 Reliability under Preventive Maintenance . . . 66
7.5 Stochastic Point Processes . . . 67
7.5.1 Renewal Process . . . 68
7.5.2 Minimal Repair process . . . 69
7.5.3 Overhaul . . . 70

Note: The lecture templates are summarized after the book of Charles E. Ebeling, An Introduction to Reliability and Maintainability Engineering, McGraw-Hill, 1997.

For a reader who would like to have an in-depth knowledge of the subject, it is recommended to read the entire book [Ebeling] content.

Chapter 1

Introduction

Causes of the failures include:

- bad engineering design,
- faulty construction or manufacturing processes,
- improper use,
- human error,
- poor maintenance,
- inadequate testing and inspection,
- lack of protection against excessive environmental stress, etc.

The impact of product and system failures can be:

- so insignificant that the user does not even notice it,
- but they can also lead to a catastrophic consequences for humans and the environment.

When evaluating on safety we conclude that the product will operate safely if

$$\frac{Y_{\min}}{X_{\max}} \geq \mathrm{SF}$$

where SF is a safety factor. Because durability Y and load X are random variables with probability density function $f_Y(y)$ in $f_X(x)$, even safety factor $\mathrm{SF} \gg 1$ does not guarantee the operation without defects. Evaluation on safety is therefore not sufficient because it does not take into account the scatter of the load and the durability.

A modern development process, therefore, in addition to evaluations on:

- functionality,

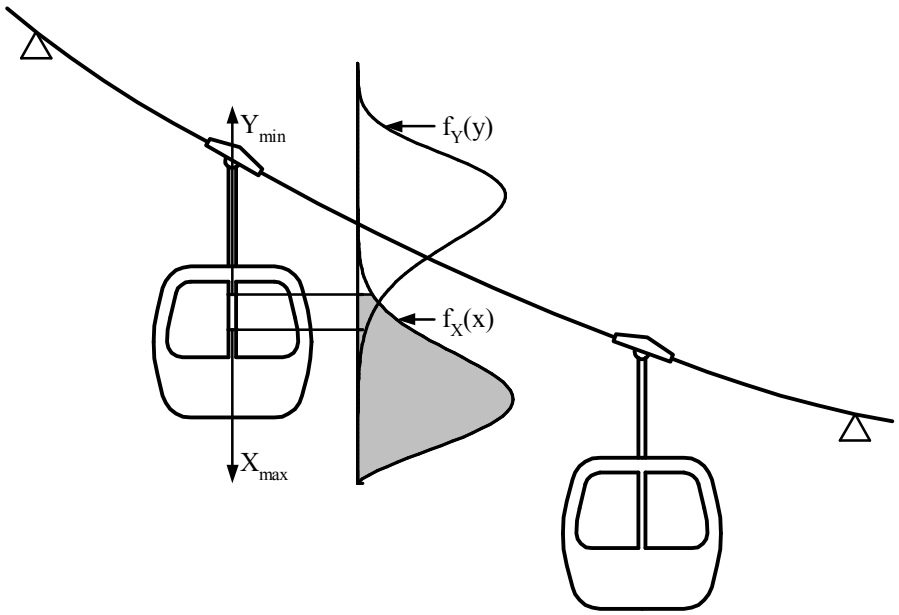

Figure 1.1. Circular cable car.

- safety,
- life cycle costs,
- ecological value,
- suitability of technology,
- aesthetic value,
- usefulness value,
- ergonomics,
- suitability for recycling, etc.

also includes evaluations on:

- reliability,
- maintainability,
- supportability,
- availability,
- effectiveness and
- product value.

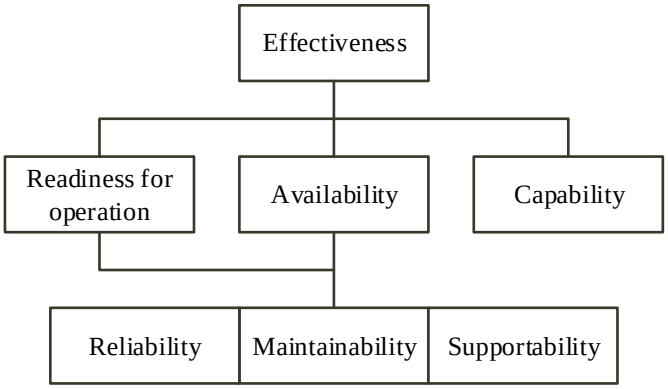

Figure 1.2. Elements of the product effectiveness.

1.1 Concepts, Terms and Definitions

The ultimate objective of each product is the quality performance of the required functions within the permissible deviations for a certain amount of time when used under certain conditions of use, environmental and maintenance conditions, at acceptable costs and minimizing environmental pollution. The function can be described with the output characteristics of the product (the quality of message transmission in communication systems, the load capacity of the conveyor or the reliability of the brake) and the quality of the product is determined by reliability, maintainability, supportability, availability, effectiveness, and product value.

Reliability is defined to be the probability that a component or system will perform a required function within the permissible deviations for a given period of time when used under stated operating and environmental conditions. Prior to the determination of reliability, it is necessary to clearly define the failures, to connect them with the functions of the product and to select the unit of time. The specified time interval can be based on calendar or clock time, operating hours or cycles. The cycle can be a turn of the engine, a load cycle or a block of time load history. The terms of use and the environmental conditions in which the product operates must meet the design requirements.

Maintainability is defined to be the probability that a failed component or system will be restored or repaired to a specified condition within a period of time when maintenance is performed in accordance with prescribed procedures. Maintenance is usually a function of time and depends only on the time of repair. The delay in logistical support, waiting time for maintenance personnel and parts and administrative time are not included in the maintainability and are usually treated separately.

Supportability is defined as the degree to which product characteristics and planned support resources, including personnel, meet project requirements. Supportability is a function of time and depends on the delay in logistic support and

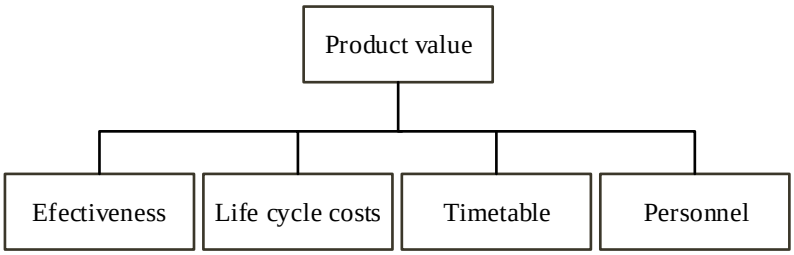

Figure 1.3. Elements of the product value.

the maintenance delay.

Reliability, maintainability and supportability are at a higher level linked to availability. **Availability** is defined as the probability that a component or system is performing its required function at a given point in time or time interval when used under stated operating, environmental and maintenance conditions. Availability is always greater or equal to reliability and is the preferred measure when the system or component can be restored since it accounts for both failures (reliability) and repairs (maintainability).

In the broadest sense, product quality is determined by its effectiveness and product value. **Effectiveness** is the probability that the product will meet project requirements under certain operating, environmental and maintenance conditions, depending on the readiness for operation, availability and capability. **Readiness for operation** corresponds to a state vector at the first entry into operation, **capability** however specifies the probability that the product will fulfill the required functions depending on the state in which it is located. The breakdown of effectiveness is shown in Figure 1.2.

Product value links effectiveness, life cycle costs, timetables and personnel (Figure 1.3).Previous analyzes have shown that life cycle costs can be reduced by devoting enough attention to reliability, maintainability and supportability already in the early stages of the product's life cycle. If we want to increase the value, we must increase the effectiveness at minimal costs in as short a time as possible and with as little personnel as possible.

1.2 Product Attributes

quality performance	effectiveness	product value
operating	**reliability**	- effectiveness
- reach	- selection of materials and parts	- acquisition costs
- speed	- derating	- operations and support costs
- precision class	- stress analysis	
- sensitivity	- strength analysis	- salvage value
- useful cargo	- complexity and technology	- timetables
- output power	- redundancy	- personnel
- ease of use	**maintainability**	
physical	- failure isolation and diagnostics	
- volume and density	- standardization and parts exchangeability	
- mass		
- shape	- modularity and accessibility	
functional	- repair or replacement	
- safety	- proactive maintenance	
- fulfillment rate	**suportability**	
- functions	- number of redundant components	
	- number of spare parts	
	- number of maintenance channels	
	availability	

Tabel 1.1. Product attributes.

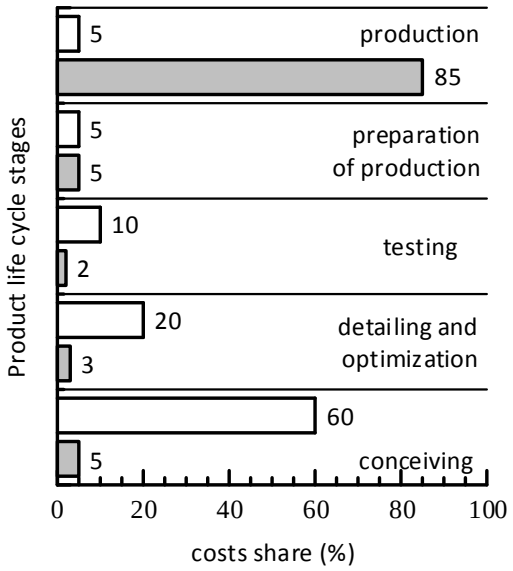

Figure 1.4. Cost breakdown by product life cycle stages.

1.3 Basic Time Divisions

The operating time may include:

- working hours,
- free time and time in standby mode.

Working hours is the time during which the product performs the required functions within the permissible tolerances. In the free time there is no need for operation, while the product performs only a limited number of functions or does not operate during the standby time. The free time and standby time vary in the speed of the product's transition to the operating state. The non-operating time is divided into:

- delay in logistics support,
- delay in maintenance and
- repair time.

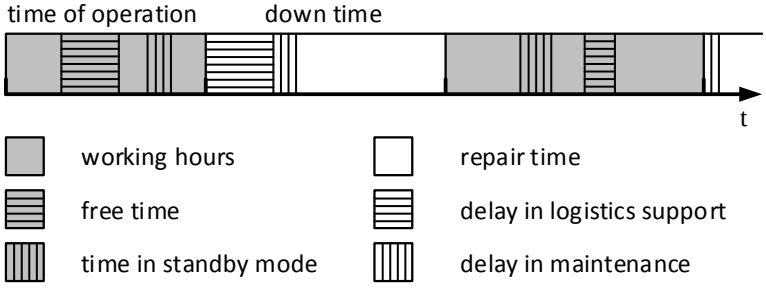

Figure 1.5. Time bus of the product status.

1.4 Effectiveness and Costs

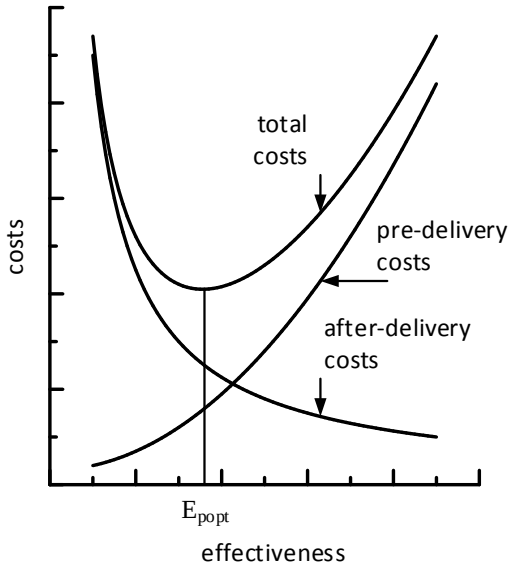

Figure 1.6. Effectiveness and the manufacturer costs.

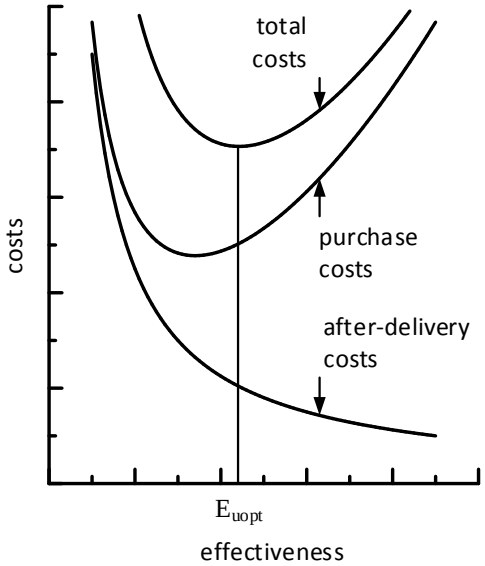

Figure 1.7. Effectiveness and the user costs.

Chapter 2

Basic Reliability Models

We distinguish four characteristic functions that describe the reliability of the product:

- reliability function,
- cumulative distribution function,
- probability density function and
- hazard rate function.

Each of these functions provides a unique and complete reliability description from a different angle of view. If we know one, we can use it to express all others. Knowing these functions we can also calculate:

- mean time to failure,
- failure distribution variance,
- median time to failure and,
- most likely observed failure time (mode).

2.1 The Failure Distribution

Reliability $R(t)$ is the probability that the time to failure is going to be $T \geq t$

$$R(t) = \Pr\{T \geq t\} = \int_t^\infty f(t)dt \tag{2.1}$$

Cumulative distribution function $F(t)$ is the probability that a failure occurs before time t

$$F(t) = \Pr\{T < t\} = 1 - R(t) = \int_0^t f(t)dt \tag{2.2}$$

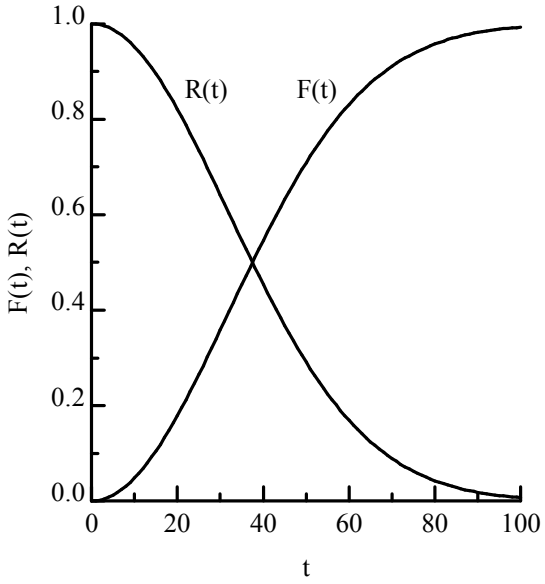

Figure 2.1. Reliability and cumulative distribution functions.

Probability density function is defined as

$$f(t) = \frac{dF(t)}{dt} = -\frac{dR(t)}{dt} \tag{2.3}$$

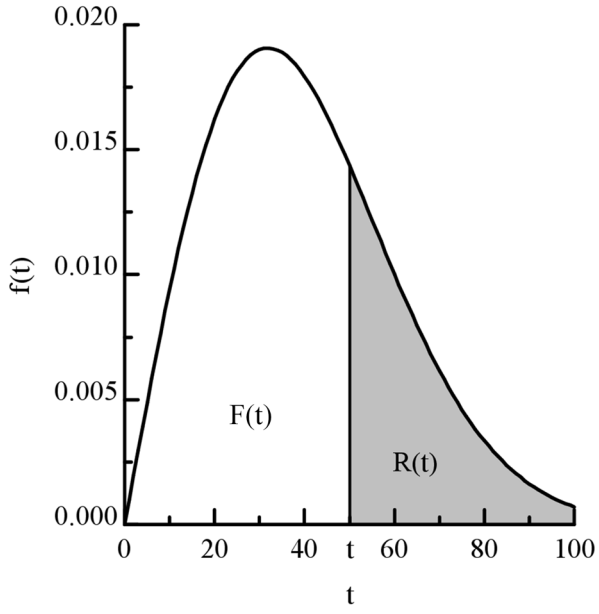

Figure 2.2. Probability density function.

2.2 Mean Time to Failure

Expected mean time to failure MTTF is defined as

$$\text{MTTF} = E[T] = \int_0^\infty t f(t) dt \tag{2.4}$$

It can also be shown that

$$\text{MTTF} = \int_0^\infty R(t) dt \tag{2.5}$$

Median time to failure t_{med}

$$R(t_{\text{med}}) = \Pr\{T \geq t_{\text{med}}\} = 0.5$$

Most likely observed failure time t_{mod}

$$f(t_{\text{mod}}) = \max_{0 \leq t < \infty} f(t)$$

Failure distribution variance

$$\sigma^2 = E[(T - \text{MTTF})^2] = \int_0^\infty (t - \text{MTTF})^2 f(t) dt \tag{2.6}$$

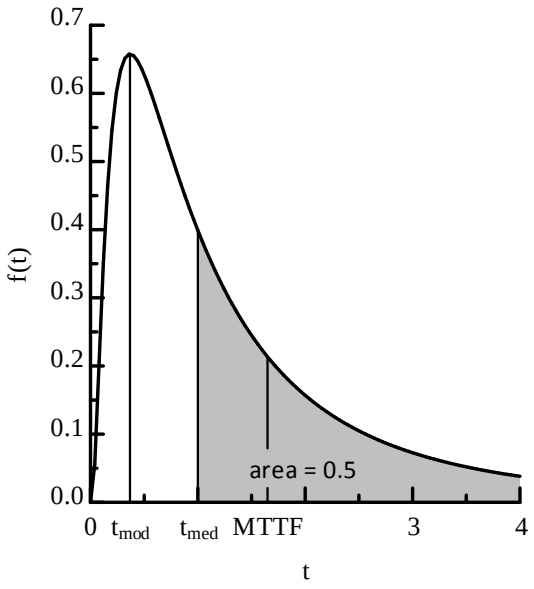

Figure 2.3. Comparison between mean time to failure, median and mode time.

2.3 Hazard Rate Function

Hazard rate function $\lambda(t)$ provides an instantaneous (at time t) rate of failure given that the system has survived to time t

$$\lambda(t) = \frac{f(t)}{R(t)} \tag{2.7}$$

Reliability as a function of hazard rate function

$$R(t) = \exp\left\{-\int_0^t \lambda(t)dt\right\} \tag{2.8}$$

Cumulative failure rate

$$L(t) = \int_0^t \lambda(t)dt \tag{2.9}$$

Average failure rate defined between two times $t_1 \leq T \leq t_2$

$$\mathrm{AFR}(t_1, t_2) = \frac{1}{t_2 - t_1}\int_{t_1}^{t_2} \lambda(t)dt \tag{2.10}$$

2.4 Bathtub Curve

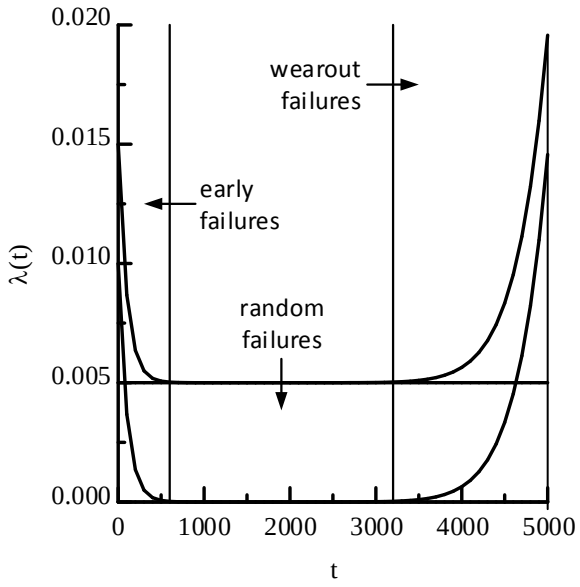

Figure 2.4. Bathtub curve.

Failure type	model	cause of failure	prevention
early failures	DFR	production failure poor quality control contamination poor workmanship	burn-in testing screening quality control acceptance testing
random failures	CFR	operating conditions environmental conditions human error random events	redundancy safety factor
wearout failures	IFR	material fatigue corrosion aging wear	derating Preventive maintenace Parts replacemnet technology

Tabel 2.1. Types and causes of failures and failure prevention.

2.5 Conditional Reliability

Conditional reliability is the probability that the product will be in operation until the moment t provided that it was in the operating state after the burn-in period or the warranty period T_0.

$$R(t|T_0) = \frac{R(t+T_0)}{R(T_0)} \tag{2.11}$$

Residual mean time to failure (MTTF taking into account T_0)

$$\mathrm{MTTF}(T_0) = \int_0^\infty R(t|T_0)dt = \frac{1}{R(T_0)} \int_{T_0}^\infty R(t)dt \tag{2.12}$$

2.6 Probability Models

2.6.1 The Exponential Distribution

Reliability function

$$R(t) = \exp\left\{-\lambda \int_0^t dt\right\} = e^{-\lambda t} \tag{2.13}$$

Cumulative distribution function of failures

$$F(t) = 1 - e^{-\lambda t} \tag{2.14}$$

Exponential probability density function

$$f(t) = -\frac{dR(t)}{dt} = \lambda e^{-\lambda t} \tag{2.15}$$

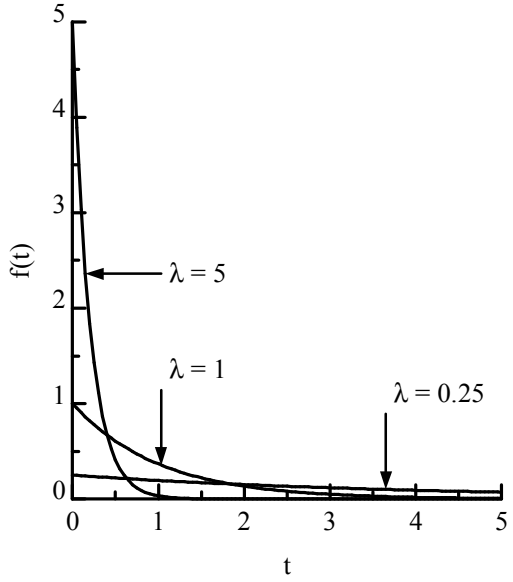

Figure 2.5. The exponential probability density function.

Mean time to failure

$$\text{MTTF} = \int_0^\infty R(t)dt = \int_0^\infty e^{-\lambda t} = \left.\frac{e^{-\lambda t}}{-\lambda}\right|_0^\infty = \frac{1}{\lambda} \tag{2.16}$$

Failure distribution variance

$$\sigma^2 = \int_0^\infty (t - \text{MTTF})^2 f(t)dt = \int_0^\infty (t - 1/\lambda)^2 \lambda e^{-\lambda t} dt = \frac{1}{\lambda^2} \tag{2.17}$$

The probability that the product (component) will be in operation until MTTF is

$$R(\text{MTTF}) = e^{-\text{MTTF}/\text{MTTF}} = e^{-1} = 0.367879$$

CFR model does not have a memory.

2.6.2 The Weibull Distribution

Hazard rate function

$$\lambda(t) = \frac{\beta}{\theta}\left(\frac{t}{\theta}\right)^{\beta-1} \qquad \text{za } \theta > 0,\ \beta > 0 \text{ in } t \geq 0$$

Reliability function

$$R(t) = \exp\left\{-\int_0^t \frac{\beta}{\theta}\left(\frac{t}{\theta}\right)^{\beta-1} dt\right\} = e^{-\left(\frac{t}{\theta}\right)^\beta} \tag{2.18}$$

Probability density function

$$f(t) = \frac{\beta}{\theta}\left(\frac{t}{\theta}\right)^{\beta-1} e^{-\left(\frac{t}{\theta}\right)^\beta} \tag{2.19}$$

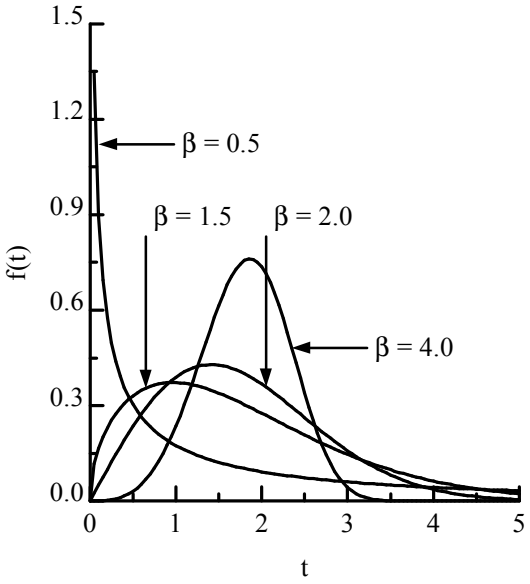

Figure 2.6. The Weibull probability density function for $\theta = 2.0$.

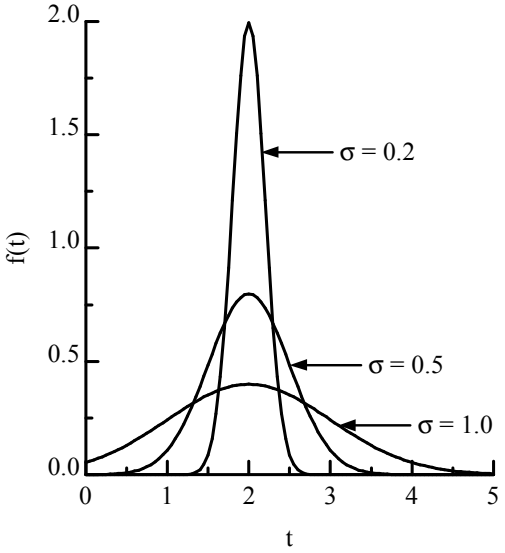

Figure 2.7. The Normal probability density function for $\mu = 2.0$.

Mean time to failure

$$\text{MTTF} = \theta\Gamma[1 + 1/\beta] \tag{2.20}$$

Failure distribution variance

$$\sigma^2 = \theta^2(\Gamma[1 + 2/\beta] - \Gamma^2[1 + 1/\beta]) \tag{2.21}$$

2.6.3 The Normal Distribution

Probability density function

$$f(t) = \frac{1}{\sqrt{2\pi}\sigma} \exp\left\{-\frac{(t-\mu)^2}{2\sigma^2}\right\} \tag{2.22}$$

Reliability function

$$R(t) = \frac{1}{\sqrt{2\pi}\sigma} \int_t^\infty \exp\left\{-\frac{(t-\mu)^2}{2\sigma^2}\right\} dt \tag{2.23}$$

Mean time to failure

$$\text{MTTF} = \mu \tag{2.24}$$

2.6.4 The Log-normal Distribution

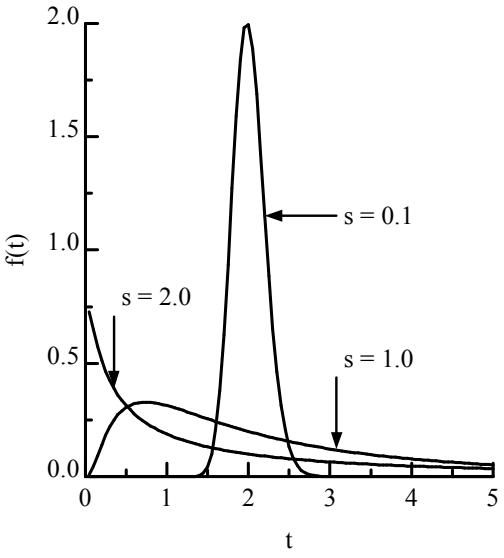

Figure 2.8. The Log-normal probability density function for $t_{\text{med}} = 2.0$.

Probability density function

$$f(t) = \frac{1}{\sqrt{2\pi}ts} \exp\left\{-\frac{1}{2}\frac{(\ln(t/t_{\text{med}}))^2}{s^2}\right\} \tag{2.25}$$

Reliability function expressed by Laplace function

$$R(t) = 1 - \Phi((\ln t - \ln t_{\text{med}})/s) \tag{2.26}$$

Mean time to failure

$$\text{MTTF} = t_{\text{med}} \exp(s^2/2) \tag{2.27}$$

Failure distribution variance

$$\sigma^2 = t_{\text{med}}^2 \exp s^2 (\exp s^2 - 1) \tag{2.28}$$

Chapter 3

Reliability of Systems

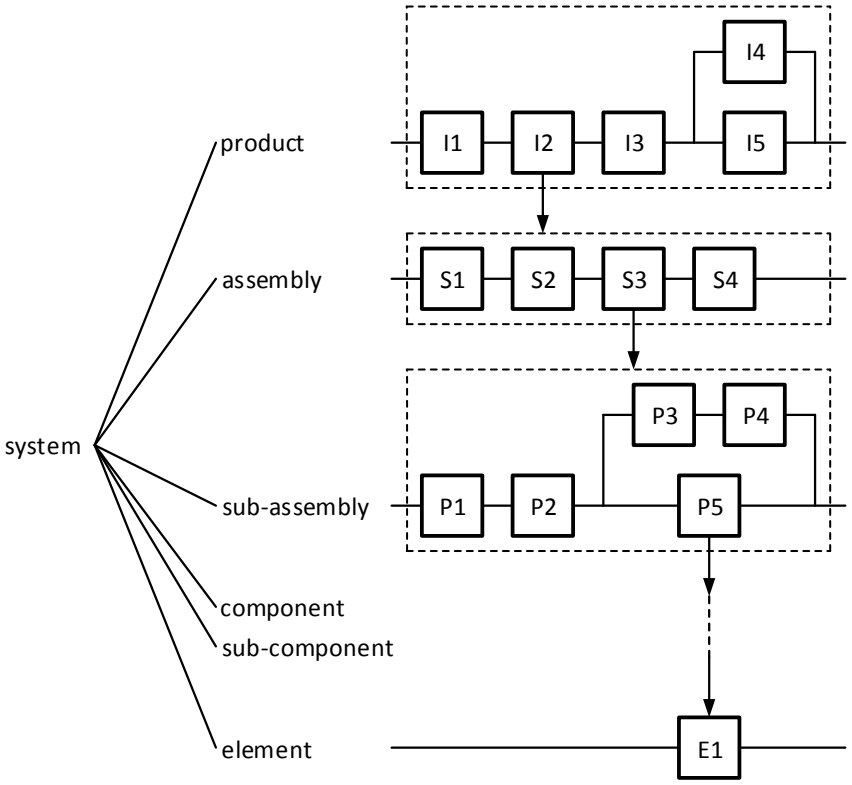

Figure 3.1. Reliability block diagram of a system.

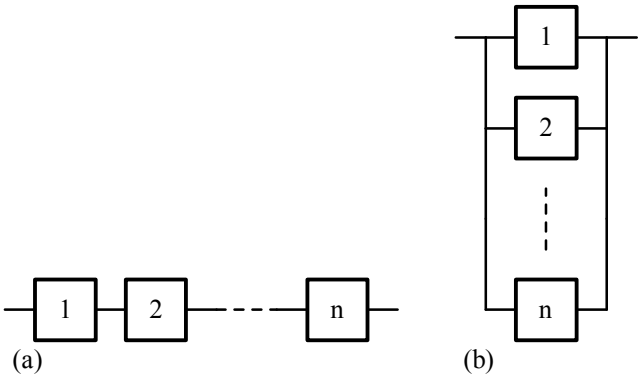

Figure 3.2. Reliability block diagram for n components in series (a) and in parallel (b).

3.1 Series and Parallel Configurations

Reliability of a system made of n components in series

$$R_{\mathrm{s}}(t) = \prod_{i=1}^{n} R_i(t) \tag{3.1}$$

Reliability of a system made of n statistically independent components in parallel

$$R_{\mathrm{s}}(t) = 1 - \prod_{i=1}^{n} (1 - R_i(t)) \tag{3.2}$$

n	serial	parallel
1	9.000000E-01	9.000000E-01
2	8.100000E-01	9.900000E-01
3	7.290000E-01	9.990000E-01
4	6.561000E-01	9.999000E-01
5	5.904900E-01	9.999900E-01
6	5.314410E-01	9.999990E-01
7	4.782969E-01	9.999999E-01
8	4.304672E-01	1.000000E+00
9	3.874205E-01	1.000000E+00
10	3.486784E-01	1.000000E+00

Tabel 3.1. The influence of component number n (reliability of each component $R = 0.9$) on system reliability for serial and parallel configurations.

3.2 Parallel configurations k out of n

A generalization of n parallel components occurs when a requirement exists for k out of n identical and independent components to function for the system to function. Probability that at least k out of n statistically independent parallel

components will function is

$$R_{\mathrm{s}}(t) = \sum_{i=k}^{n} \binom{n}{i} R(t)^i (1 - R(t))^{n-i} \tag{3.3}$$

3.3 Combined Series-Parallel Systems

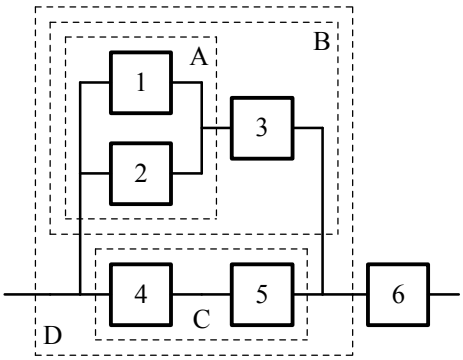

Figure 3.3. Combined series-parallel system.

3.4 Complex Configurations

For certain systems, the component configuration is such that the system reliability cannot be simply decomposed into series and parallel relationship. Such systems can be solved using the following procedures:

- decomposition,
- enumeration,
- minimal paths,
- minimal cuts and
- Monte Carlo symulations.

3.4.1 Decomposition

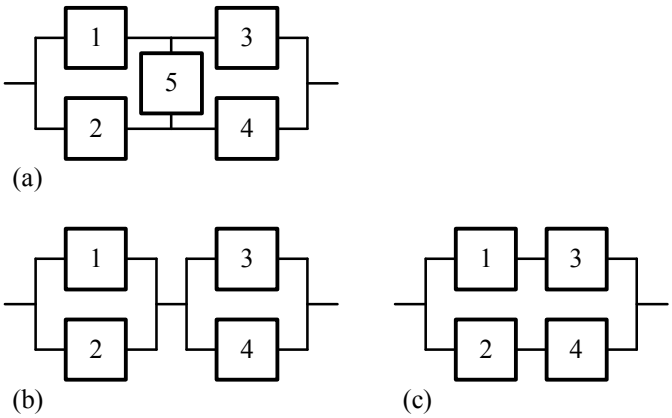

Figure 3.4. Decomposition of a linked network: Complex configuration (a), component 5 does not fail (b) and component 5 fails (c).

3.4.2 Enumeration

i	1	2	3	4	5	system	P_i operates	P_i has failed
1	S	S	S	S	S	S	0.584820	
2	F	S	S	S	S	S	0.064980	
3	S	F	S	S	S	S	0.064980	
4	S	S	F	S	S	S	0.030780	
5	S	S	S	F	S	S	0.030780	
6	S	S	S	S	F	S	0.146205	
7	F	F	S	S	S	F		0.007220
8	S	F	F	S	S	S	0.003420	
9	S	S	F	F	S	F		0.001620
10	S	S	S	F	F	S	0.007695	
11	F	S	F	S	S	S	0.003420	
12	F	S	S	F	S	S	0.003420	
13	F	S	S	S	F	S	0.016245	
14	S	F	S	F	S	S	0.003420	
15	S	F	S	S	F	S	0.016245	
16	S	S	F	S	F	S	0.007695	
17	F	F	F	S	S	F		0.000380
18	S	F	F	F	S	F		0.000180
19	S	S	F	F	F	F		0.000405
20	F	S	F	F	S	F		0.000180
21	F	S	S	F	F	F		0.000855
22	S	F	S	F	F	S	0.000855	
23	F	F	S	F	S	F		0.000380
24	F	F	S	S	F	F		0.001805
25	S	F	F	S	F	F		0.000855
26	F	S	F	S	F	S	0.000855	
27	F	F	F	F	S	F		0.000020
28	S	F	F	F	F	F		0.000045
29	F	S	F	F	F	F		0.000045
30	F	F	S	F	F	F		0.000095
31	F	F	F	S	F	F		0.000095
32	F	F	F	F	F	F		0.000005
							Σ = 0.985815	Σ = 0.014185

Figure 3.5. Enumeration method for complex configuration from Figure 3.4.

3.4.3 The System Structure Function

A very general approach for analyzing the reliability of complex systems is trough the use od the system structure function. First component state need to be defined by

$$X_i = \begin{cases} 1 & \text{if component operates} \\ 0 & \text{if component has failed} \end{cases} \tag{3.4}$$

If the system configuration consists of n components there are 2^n possible states. Each state is defined by the state vector

$$\mathbf{X} = [X_1, \ldots, X_n] \tag{3.5}$$

and the system structure function

$$\Psi(\mathbf{X}) = \begin{cases} 1 & \text{if system operates} \\ 0 & \text{if system has failed} \end{cases} \tag{3.6}$$

Therefore for a series system the system structure function is defined by

$$\Psi(\mathbf{X}) = \prod_{i=1}^{n} X_i = \min\{X_1, \ldots, X_n\}$$

and for a parallel system by

$$\Psi(\mathbf{X}) = 1 - \prod_{i=1}^{n} (1 - X_i) = \max\{X_1, \ldots, X_n\}$$

Reliability of the system and the system structure function are interconnected

$$R_\mathrm{s} = E[\Psi(\mathbf{X})] = 0 \cdot \Pr\{\Psi(\mathbf{X}) = 0\} + 1 \cdot \Pr\{\Psi(\mathbf{X}) = 1\} \tag{3.7}$$

From (3.4) and (3.7) it follows

$$X_i^n = X_i \quad E[X_i] = R_i$$

For the system composed of n statistically independent series components it applies

$$\begin{aligned} R_\mathrm{s} &= \Pr\{\Psi(\mathbf{X}) = 1\} \\ &= \Pr\{\min\{X_1, \ldots, X_n\} = 1\} \\ &= \Pr\{X_1 = 1, \ldots, X_n = 1\} \\ &= \Pr\{X_1 = 1\} \cdots \Pr\{X_n = 1\} \\ &= R_1 \cdots R_n \end{aligned}$$

and for the system composed of n statistically independent parallel components it applies

$$\begin{aligned} R_\mathrm{s} &= \Pr\{\Psi(\mathbf{X}) = 1\} \\ &= 1 - \Pr\{X_1 = 0, \ldots, X_n = 0\} \\ &= 1 - \Pr\{X_1 = 0\} \cdots \Pr\{X_n = 0\} \\ &= 1 - (1 - R_1) \cdots (1 - R_n) \end{aligned}$$

3.4.4 Coherent Systems

A system is coherent when a component reliability improvement does not degrade the system reliability. A coherent system has a structure function that is

monotonically increasing. That is if $\mathbf{Y} \geq \mathbf{X}$ then $\Psi(\mathbf{Y}) \geq \Psi(\mathbf{X})$.

3.4.5 Minimal Path and Cut Sets

A path is a set of components whose functioning ensures that the system functions. A minimal path P_i is one in which all the components within the set must function for the system to function. The number of minimal paths is upside limited and denoted by p. A state vector $\mathbf{X}$ is a vector of a minimal path when $\Psi(\mathbf{X}) = 1$ and $\mathbf{X} < \mathbf{Y}$ for each $\mathbf{Y}$ for which it applies $\Psi(\mathbf{Y}) = 1$. The system structure function is derived from the rules that apply to reliability calculation

$$\Psi(\mathbf{X}) = 1 - \prod_{i=1}^{p}(1 - \prod_{j \in P_i} X_j) \tag{3.8}$$

i	minimal path P_i	vector of minimal path X_i
1	{1,3}	[1,0,1,0,0]
2	{2,4}	[0,1,0,1,0]
3	{1,4,5}	[1,0,0,1,1]
p = 4	{2,3,5}	[0,1,1,0,1]

Tabel 3.2. Minimal path sets for complex configuration from Figure 3.4.

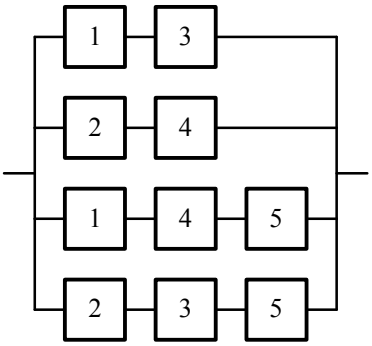

Figure 3.6. Replacement block diagram formed from path sets.

A cut is a set of components whose failure will result in a system failure. A minimal cut C_i is one in which all the components must fail in order for the system to fail. The number of minimal paths is upside limited and denoted by c. $\mathbf{X}$ is a vector of a minimal cut when $\Psi(\mathbf{X}) = 0$ and $\mathbf{X} > \mathbf{Y}$ for each $\mathbf{Y}$ for which it applies $\Psi(\mathbf{Y}) = 0$. The system structure function is also derived from the rules that apply to reliability calculation

$$\Psi(\mathbf{X}) = \prod_{i=1}^{c}(1 - \prod_{j \in C_i}(1 - X_j)) \tag{3.9}$$

i	minimal cut C_i	vector of minimal cut X_i
1	{1,2}	[0,0,1,1,1]
2	{3,4}	[1,1,0,0,1]
3	{1,4,5}	[0,1,1,0,0]
c = 4	{2,3,5}	[1,0,0,1,0]

Tabel 3.3. Minimal cut sets for complex configuration from Figure 3.4.

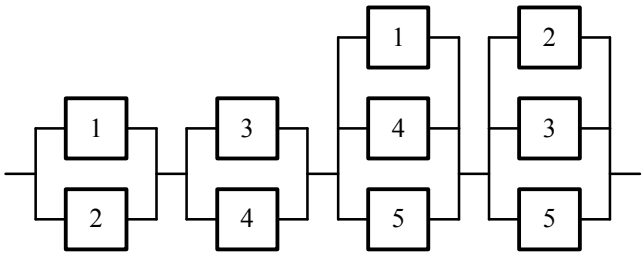

Figure 3.7. Replacement block diagram formed from cut sets.

3.4.6 System Bounds

The rough upper-bound reliability is given by

$$R_{\text{su}} = 1 - \prod_{i=1}^{n}(1 - R_i) \tag{3.10}$$

The rough lower-bound reliability is given by

$$R_{\text{sl}} = \prod_{i=1}^{n} R_i \tag{3.11}$$

The estimation of upper-bound reliability is given by

$$R_{\text{su}} = 1 - \prod_{i=1}^{p}(1 - \prod_{j \in P_i} R_j) \tag{3.12}$$

The estimation of upper-bound reliability is given by

$$R_{\text{sl}} = \prod_{i=1}^{c}(1 - \prod_{j \in C_i}(1 - R_j)) \tag{3.13}$$

3.5 Low and High Level Redundancy

Reliability of a system with a low level redundancy

$$R_{\text{l}} = (1 - (1 - R)^2)^2 = R^2(2 - R)^2$$

Reliability of a system with a high level redundancy

$$R_{\text{h}} = 1 - (1 - R^2)^2 = R^2(2 - R^2)$$

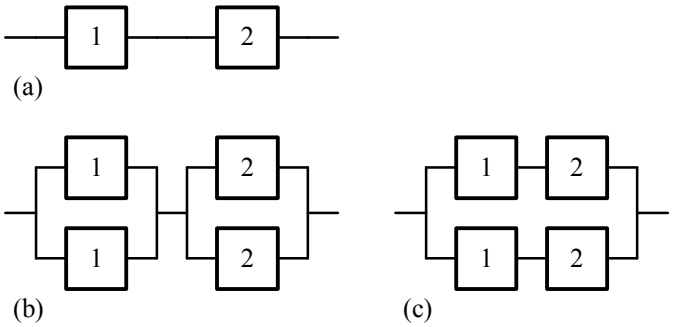

Figure 3.8. Series configuration (a), low level redundancy (b)and high level redundancy (c).

3.6 Three State Devices

For three state devices it is typical that besides an operating state they have two failure modes. For example failure at closing (short failure) and failure at opening (open failure) the valve or electrical switch.

3.6.1 Series Structure

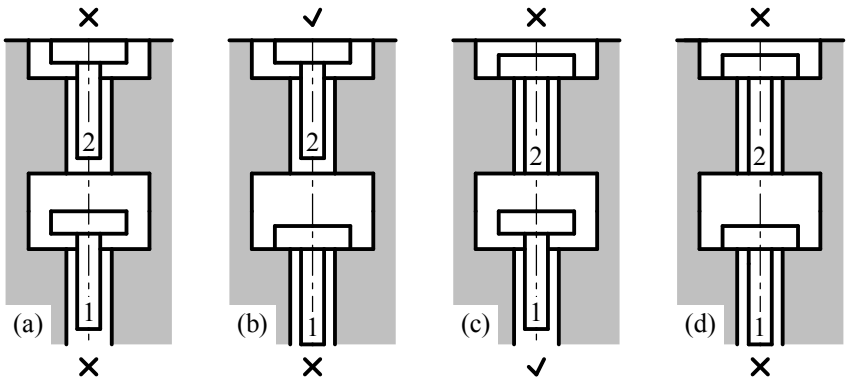

Figure 3.9. Series configuration. Failure ob both valves at closing (a), failure of valve no. 1 at opening (b), failure of valve no. 2 at opening (c) and failure of both valves at opening (d).

3.6.2 Parallel Structure

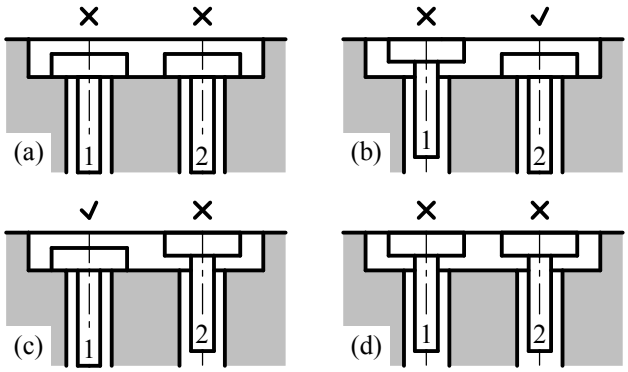

Figure 3.10. Parallel configuration. Failure ob both valves at opening (a), failure of valve no. 1 at closing (b), failure of valve no. 2 at closing (c) and failure of both valves at closing (d).

3.6.3 Low Level Redundancy

Reliability of a system with low level redundancy is calculated by

$$R_{\mathrm{l}} = 1 - (F_{\mathrm{o}} - F_{\mathrm{s}})$$

In general it can be written

$$R_{\mathrm{l}} = \prod_{i=1}^{n}(1 - q_{\mathrm{o}i}^{m}) - \prod_{i=1}^{n}(1 - (1 - q_{\mathrm{s}i})^{m}) \tag{3.14}$$

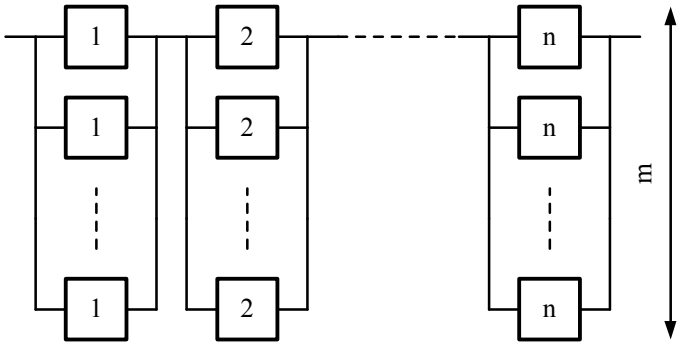

Figure 3.11. Block diagram of a system composed of n assemblies in series where each assembly has m three state components in parallel.

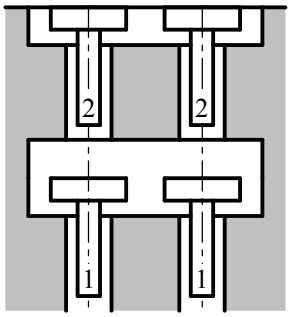

Figure 3.12. Low level redundancy for $n = m = 2$.

i	1 left valve	1 right valve	2 left valve	2 right valve	system at closing	system at opening	P_{si} at closing	P_{oi} at opening
1	S	S	S	S	S	S		
2	F	S	S	S	S	S		
3	S	F	S	S	S	S		
4	S	S	F	S	S	S		
5	S	S	S	F	S	S		
6	F	F	S	S	S	F		0.002209
7	S	F	F	S	F	S	0.011475	
8	S	S	F	F	S	F		0.003249
9	F	S	S	F	F	S	0.011475	
10	F	S	F	S	F	S	0.011475	
11	S	F	S	F	F	S	0.011475	
12	F	F	F	S	F	F	0.002025	0.000141
13	S	F	F	F	F	F	0.001275	0.000171
14	F	S	F	F	F	F	0.001275	0.000171
15	F	F	S	F	F	F	0.002025	0.000141
16	F	F	F	F	F	F	0.000225	0.000009
							F_s = 0.052725	F_o = 0.006091

Tabel 3.4. Low level redundancy for $n = m = 2$, $q_{o1} = 0.05$, $q_{o2} = 0.06$, $q_{s1} = 0.15$, $q_{s2} = 0.10$, $P_{s7} = (1 - q_{s1})q_{s1}q_{s2}(1 - q_{s2}) = 0.011475$, $P_{o8} = (1 - q_{o1})^2 q_{o2}^2 = 0.003249$ and $R_l = 1 - (F_o - F_s) = 0.941184$.

3.6.4 High Level Redundancy

Reliability of a system with high level redundancy is calculated by

$$R_h = \left(1 - \prod_{i=1}^{m} q_{si}\right)^n - \left(1 - \prod_{i=1}^{m}(1 - q_{oi})\right)^n \tag{3.15}$$

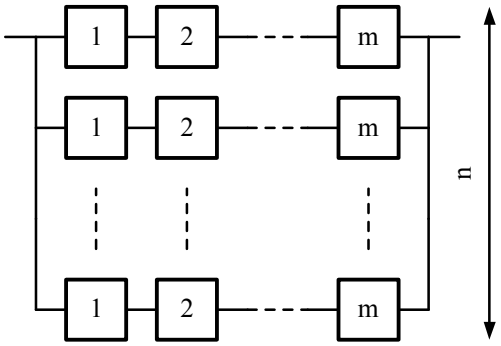

Figure 3.13. Block diagram of a system composed of n assemblies in parallel where each assembly has m three state components in series.

Chapter 4

State Dependent Systems

4.1 Markov Analysis

For a two component series system the system reliability is

$$R_s(t) = P_1(t)$$

and for two component parallel system as follows

$$R_s(t) = P_1(t) + P_2(t) + P_3(t)$$

Since the system must be in one of the states we can further write

$$P_1(t) + P_2(t) + P_3(t) + P_4(t) = 1 \tag{4.1}$$

If the system at the time t is in state no. 1 then the probability that in time $t + \Delta t$ will still be in the same state equals the probability $P_1(t)$ reduced by a probability of transition to states no. 2 or 3. Probability that failure occurs in the time interval $t \leq T \leq t + \Delta t$ with the condition that component no. 1 operates until the time t is

$$\Pr\{t \leq T \leq t + \Delta t | T \geq t\} = \frac{R_1(t) - R_1(t + \Delta t)}{R_1(t)}$$

Probability that the system will be in state no. 1 at time t and will go into the state no. 2 during the time interval $t \leq T \leq t + \Delta t$ corresponds to the associated

state	1	2	system serial conf.	system parallel conf.
1	S	S	S	S
2	F	S	F	S
3	S	F	F	S
4	F	F	F	F

Tabel 4.1. Possible states of the system.

probabilities of both events

$$\frac{R_1(t) - R_1(t+\Delta t)}{R_1(t)} P_1(t)$$

Probability that the system at time $t + \Delta t$ will still be in state no. 1 therefore is

$$\begin{aligned} P_1(t+\Delta t) = P_1(t) &- \frac{R_1(t) - R_1(t+\Delta t)}{R_1(t)} P_1(t) \\ &- \frac{R_2(t) - R_2(t+\Delta t)}{R_2(t)} P_1(t) \end{aligned} \tag{4.2}$$

Probability that the system will be in state no. 2 at time $t + \Delta t$ corresponds to the probability that the system is in state no. 2 at time t increased by the probability of its transition from the state no. 1 to the state no. 2 and decreased by the probability of its transition from the state no. 2 to the state no. 4

$$\begin{aligned} P_2(t+\Delta t) = P_2(t) &+ \frac{R_1(t) - R_1(t+\Delta t)}{R_1(t)} P_1(t) \\ &- \frac{R_2(t) - R_2(t+\Delta t)}{R_2(t)} P_2(t) \end{aligned} \tag{4.3}$$

Similarly we can derive the probability that the system at time $t + \Delta t$ is going to be in the state no. 3

$$\begin{aligned} P_3(t+\Delta t) = P_3(t) &+ \frac{R_2(t) - R_2(t+\Delta t)}{R_2(t)} P_1(t) \\ &- \frac{R_1(t) - R_1(t+\Delta t)}{R_1(t)} P_3(t) \end{aligned} \tag{4.4}$$

or in the state no. 4

$$\begin{aligned} P_4(t+\Delta t) = P_4(t) &+ \frac{R_2(t) - R_2(t+\Delta t)}{R_2(t)} P_2(t) \\ &+ \frac{R_1(t) - R_1(t+\Delta t)}{R_1(t)} P_3(t) \end{aligned} \tag{4.5}$$

If we divide equation (4.2) with Δt we get

$$\begin{aligned} \frac{P_1(t+\Delta t) - P_1(t)}{\Delta t} = &- \frac{R_1(t) - R_1(t+\Delta t)}{\Delta t R_1(t)} P_1(t) \\ &- \frac{R_2(t) - R_2(t+\Delta t)}{\Delta t R_2(t)} P_1(t) \end{aligned}$$

Because it applies

$$\lim_{\Delta t \to 0} \frac{P(t+\Delta t) - P(t)}{\Delta t} = \frac{dP(t)}{dt} = P'(t)$$

and

$$\lim_{\Delta t \to 0} -\frac{R(t+\Delta t) - R(t)}{\Delta t} = f(t)$$

the equations (4.2) to (4.5) forms the system of ordinary differential equations of the first order

$$\begin{bmatrix} P_1'(t) \\ P_2'(t) \\ P_3'(t) \\ P_4'(t) \end{bmatrix} = \begin{bmatrix} -\lambda_1 - \lambda_2 & 0 & 0 & 0 \\ \lambda_1 & -\lambda_2 & 0 & 0 \\ \lambda_2 & 0 & -\lambda_1 & 0 \\ 0 & \lambda_2 & \lambda_1 & 0 \end{bmatrix} \begin{bmatrix} P_1(t) \\ P_2(t) \\ P_3(t) \\ P_4(t) \end{bmatrix} \tag{4.6}$$

If failure rates are constant then the system of differential equations is analytically solvable. Probability that the system will be in state no. 1 can be calculated by an integration method for separating variables

$$\int \frac{dP_1(t)}{P_1(t)} = -(\lambda_1 + \lambda_2) \int dt + C_1$$

from there it follows

$$\ln P_1(t) = -(\lambda_1 + \lambda_2)t + C_1$$

and

$$P_1(t) = e^{-(\lambda_1+\lambda_2)t+C_1}$$

Value of the integration constant C_1 is calculated from the condition $P_1(0) = 1$ which says that at time $t = 0$ the system is in state no. 1 with probability of 1. From there it follows $C_1 = 0$ and

$$P_1(t) = e^{-(\lambda_1+\lambda_2)t} \tag{4.7}$$

Probability that the system at time t is in state no. 2 is a result of a linear differential equation

$$P_2'(t) + \lambda_2 P_2(t) = \lambda_1 e^{-(\lambda_1+\lambda_2)t}$$

where

$$P_2(t) = e^{-\lambda_2 \int dt} \left\{ \lambda_1 \int e^{-(\lambda_1+\lambda_2)t+\lambda_2 \int dt} dt + C_2 \right\}$$

or

$$P_2(t) = -e^{-(\lambda_1+\lambda_2)t} + C_2 e^{-\lambda_2 t}$$

Value of the integration constant $C_2 = 1$ comes from boundary condition $P_2(0) = 0$. Probability that the system at time t will be in state no. 2 is therefore

$$P_2(t) = -e^{-(\lambda_1+\lambda_2)t} + e^{-\lambda_2 t} \tag{4.8}$$

Similarly we can derive the following equation

$$P_3(t) = e^{-\lambda_1 t} - e^{-(\lambda_1+\lambda_2)t} \tag{4.9}$$

Probability that the system will be in state no. 4 is

$$P_4(t) = 1 - P_1(t) - P_2(t) - P_3(t) \tag{4.10}$$

Whilst the probability of a system composed of two components in series equals

$$R_{\mathrm{s}}(t) = e^{-(\lambda_1+\lambda_2)t} \tag{4.11}$$

for a system with composed of two components in parallel applies

$$R_{\mathrm{s}}(t) = e^{-\lambda_1 t} + e^{-\lambda_2 t} - e^{-(\lambda_1+\lambda_2)t} \tag{4.12}$$

4.2 Load Sharing Systems

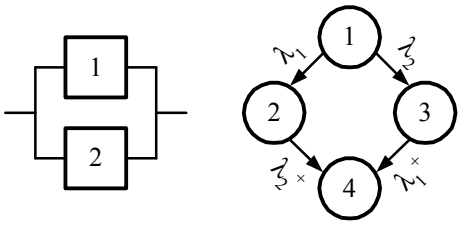

Figure 4.1. Block and rate diagrams for a two component load sharing system.

A system of differential equations for a load-sharing system

$$\begin{bmatrix} P_1'(t) \\ P_2'(t) \\ P_3'(t) \\ P_4'(t) \end{bmatrix} = \begin{bmatrix} -\lambda_1-\lambda_2 & 0 & 0 & 0 \\ \lambda_1 & -\lambda_2^+ & 0 & 0 \\ \lambda_2 & 0 & -\lambda_1^+ & 0 \\ 0 & \lambda_2^+ & \lambda_1^+ & 0 \end{bmatrix} \begin{bmatrix} P_1(t) \\ P_2(t) \\ P_3(t) \\ P_4(t) \end{bmatrix} \tag{4.13}$$

Solution of a differential equation system

$$\begin{aligned} P_1(t) &= e^{-(\lambda_1+\lambda_2)t} \\ P_2(t) &= \frac{\lambda_1}{\lambda_1+\lambda_2-\lambda_2^+}(e^{-\lambda_2^+ t} - e^{-(\lambda_1+\lambda_2)t}) \\ P_3(t) &= \frac{\lambda_2}{\lambda_1+\lambda_2-\lambda_1^+}(e^{-\lambda_1^+ t} - e^{-(\lambda_1+\lambda_2)t}) \end{aligned} \tag{4.14}$$

4.3 Standby Systems or Passive Parallel Configurations

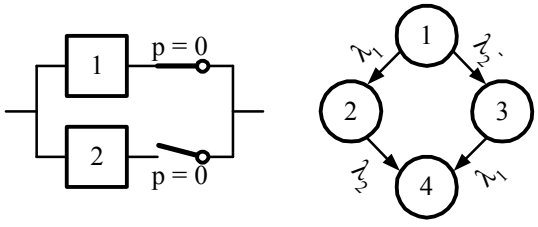

Figure 4.2. Block and rate diagrams for a two component standby system with failures in standby.

A system of differential equations for a standby system without switching failure $p = 0$

$$\begin{bmatrix} P_1'(t) \\ P_2'(t) \\ P_3'(t) \\ P_4'(t) \end{bmatrix} = \begin{bmatrix} -\lambda_1 - \lambda_2^- & 0 & 0 & 0 \\ \lambda_1 & -\lambda_2 & 0 & 0 \\ \lambda_2^- & 0 & -\lambda_1 & 0 \\ 0 & \lambda_2 & \lambda_1 & 0 \end{bmatrix} \begin{bmatrix} P_1(t) \\ P_2(t) \\ P_3(t) \\ P_4(t) \end{bmatrix} \tag{4.15}$$

Solution of a differential equation system

$$\begin{aligned} P_1(t) &= e^{-(\lambda_1+\lambda_2^-)t} \\ P_2(t) &= \frac{\lambda_1}{\lambda_1 + \lambda_2^- - \lambda_2}(e^{-\lambda_2 t} - e^{-(\lambda_1+\lambda_2^-)t}) \\ P_3(t) &= e^{-\lambda_1 t} - e^{-(\lambda_1+\lambda_2^-)t} \end{aligned} \tag{4.16}$$

System reliability

$$R_{\mathrm{s}}(t) = e^{-\lambda_1 t} + \frac{\lambda_1}{\lambda_1 + \lambda_2^- - \lambda_2}(e^{-\lambda_2 t} - e^{-(\lambda_1+\lambda_2^-)t}) \tag{4.17}$$

Mean time to failure MTTF

$$\mathrm{MTTF} = \frac{1}{\lambda_1} + \frac{\lambda_1}{\lambda_2(\lambda_1 + \lambda_2^-)} \tag{4.18}$$

4.4 Passive Parallel System of Identical Components

A system of differential equations for a passive parallel system of identical components

$$\begin{bmatrix} P_1'(t) \\ P_2'(t) \\ P_3'(t) \\ P_4'(t) \\ P_5'(t) \end{bmatrix} = \begin{bmatrix} -\lambda & 0 & 0 & 0 & 0 \\ \lambda & -\lambda & 0 & 0 & 0 \\ 0 & \lambda & -\lambda & 0 & 0 \\ 0 & 0 & \lambda & -\lambda & 0 \\ 0 & 0 & 0 & \lambda & 0 \end{bmatrix} \begin{bmatrix} P_1(t) \\ P_2(t) \\ P_3(t) \\ P_4(t) \\ P_5(t) \end{bmatrix} \tag{4.19}$$

state	1	2	3	4	system
1	S	S	S	S	S
2	F	S	S	S	S
3	F	F	S	S	S
4	F	F	F	S	S
5	F	F	F	F	F

Tabel 4.2. Possible states of the system.

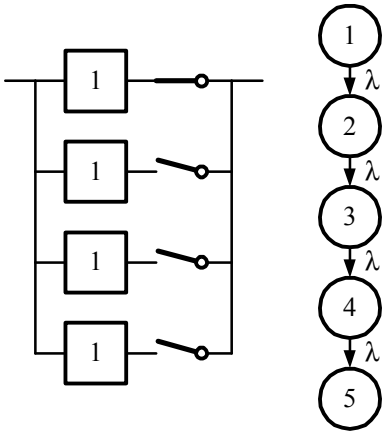

Figure 4.3. Block and rate diagrams for a passive parallel system of identical components.

Reliability of a passive parallel system of n identical components composed and belonging MTTF are therefore

$$\begin{aligned} R_{\mathrm{s}}(t) &= \sum_{i=1}^{n} P_i(t) = e^{-\lambda t} \sum_{i=0}^{n-1} \frac{(\lambda t)^i}{i!} \\ \mathrm{MTTF} &= \int_0^\infty R_{\mathrm{s}}(t)dt = \sum_{i=0}^{n-1} \int_0^\infty \frac{(\lambda t)^i e^{-\lambda t}}{i!} dt = \sum_{i=0}^{n-1} \frac{\Gamma[i+1]}{\lambda i!} = \frac{n}{\lambda} \end{aligned} \tag{4.20}$$

4.5 Standby Systems with Switching Failure

A system of differential equations for a standby system with switching failure $p > 0$

$$\begin{bmatrix} P_1'(t) \\ P_2'(t) \\ P_3'(t) \\ P_4'(t) \end{bmatrix} = \begin{bmatrix} -q\lambda_1 - p\lambda_1 - \lambda_2^- & 0 & 0 & 0 \\ q\lambda_1 & -\lambda_2 & 0 & 0 \\ \lambda_2^- & 0 & -\lambda_1 & 0 \\ p\lambda_1 & \lambda_2 & \lambda_1 & 0 \end{bmatrix} \begin{bmatrix} P_1(t) \\ P_2(t) \\ P_3(t) \\ P_4(t) \end{bmatrix} \tag{4.21}$$

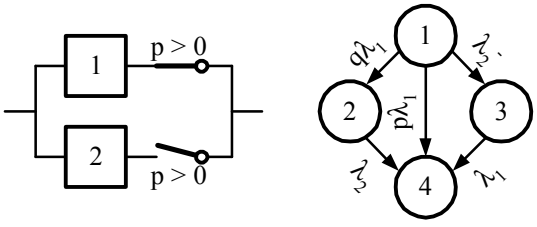

Figure 4.4. Block and rate diagrams for a two component standby system with failures in standby and with switching failure.

where $q = 1 - p$. Solution of a differential equation system (4.21)

$$\begin{aligned} P_1(t) &= e^{-(\lambda_1+\lambda_2^-)t} \\ P_2(t) &= \frac{q\lambda_1}{\lambda_1+\lambda_2^- - \lambda_2}(e^{-\lambda_2 t} - e^{-(\lambda_1+\lambda_2^-)t}) \\ P_3(t) &= e^{-\lambda_1 t} - e^{-(\lambda_1+\lambda_2^-)t} \end{aligned} \tag{4.22}$$

and system reliability

$$R_s(t) = e^{-\lambda_1 t} + \frac{q\lambda_1}{\lambda_1+\lambda_2^- - \lambda_2}(e^{-\lambda_2 t} - e^{-(\lambda_1+\lambda_2^-)t}) \tag{4.23}$$

4.6 Degraded Systems

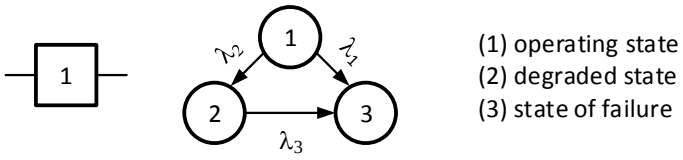

Figure 4.5. Block and rate diagrams for a degraded system.

A system of differential equations for a degraded system

$$\begin{bmatrix} P_1'(t) \\ P_2'(t) \\ P_3'(t) \end{bmatrix} = \begin{bmatrix} -\lambda_1 - \lambda_2 & 0 & 0 \\ \lambda_2 & -\lambda_3 & 0 \\ \lambda_1 & \lambda_3 & 0 \end{bmatrix} \begin{bmatrix} P_1(t) \\ P_2(t) \\ P_3(t) \end{bmatrix} \tag{4.24}$$

Solution of a differential equation system

$$\begin{aligned} P_1(t) &= e^{-(\lambda_1+\lambda_2)t} \\ P_2(t) &= \frac{\lambda_2}{\lambda_1+\lambda_2-\lambda_3}(e^{-\lambda_3 t} - e^{-(\lambda_1+\lambda_2)t}) \\ P_3(t) &= 1 - P_1(t) - P_2(t) \end{aligned} \tag{4.25}$$

and system reliability

$$R_s(t) = P_1(t) + P_2(t) \tag{4.26}$$

4.7 Three State Devices

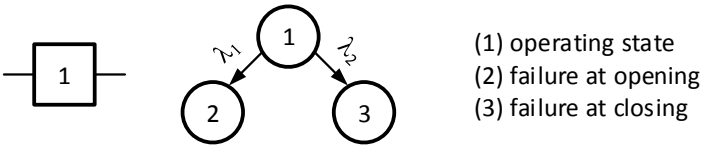

Figure 4.6. Block and rate diagrams for a three state device.

A system of differential equations for a three state devices

$$\begin{bmatrix} P_1'(t) \\ P_2'(t) \\ P_3'(t) \end{bmatrix} = \begin{bmatrix} -\lambda_1 - \lambda_2 & 0 & 0 \\ \lambda_1 & 0 & 0 \\ \lambda_2 & 0 & 0 \end{bmatrix} \begin{bmatrix} P_1(t) \\ P_2(t) \\ P_3(t) \end{bmatrix} \tag{4.27}$$

Solution of a differential equation system

$$\begin{aligned} P_1(t) &= e^{-(\lambda_1+\lambda_2)t} \\ P_2(t) &= \frac{\lambda_1}{\lambda_1+\lambda_2}(1 - e^{-(\lambda_1+\lambda_2)t}) \\ P_3(t) &= 1 - P_1(t) - P_2(t) \end{aligned} \tag{4.28}$$

and system reliability

$$R_{\mathrm{s}}(t) = e^{-(\lambda_1+\lambda_2)t} \tag{4.29}$$

Chapter 5

Physical Reliability Models

In previous chapters, we dealt with reliability models in which the reliability of a component or system was considered as a function of time only. Because the operating and environmental conditions can change over time, reliability often also depends on other factors. Reliability models which in addition to time also consider other parameters are called covariate models. Static stress-strength models do not depend on time but on applied load and strength. Unlike static stress-strength models, dynamic stress-strength models also take into account the impact of load history. In addition to the static stress-strength reliability models there are also so called physics of failure models.

5.1 Covariate Models

A simple example of a covariate model for the exponential probability density function of failures is given by the equation

$$\lambda(\mathbf{x}) = a_0 + \sum_{i=1}^{n} a_i x_i$$

The reliability of the component by taking into account additional parameters for the case of the exponential probability density function of failures is calculated by

$$R(t) = e^{-\lambda(\mathbf{x})t}$$

5.2 Static Models

Probability that the stress X will not be greater than x is calculated by

$$\Pr\{X < x\} = F_X(x) = \int_0^x f_X(x)dx \tag{5.1}$$

Probability that the strength Y will not exceed the value y can be calculated by

$$\Pr\{Y < y\} = F_Y(y) = \int_0^y f_Y(y)dy \tag{5.2}$$

If stress X is a random variable and strength a constant value $Y = y$ (see Figure 5.1), then the reliability is

$$R = \Pr\{X < y\} = F_X(y) = \int_0^y f_X(x)dx \tag{5.3}$$

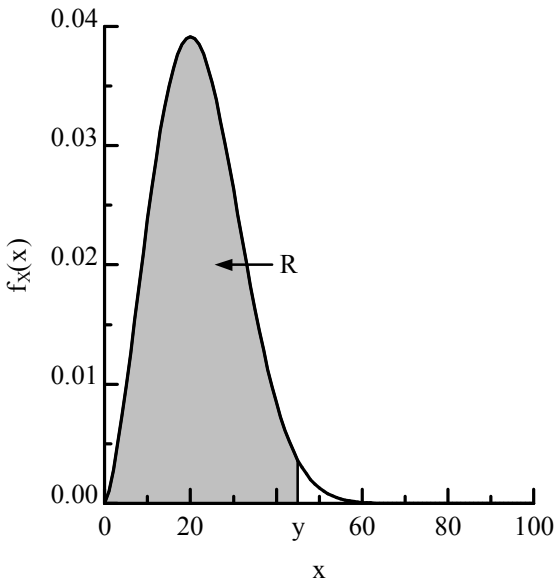

Figure 5.1. Reliability for random stress and constant strength.

If strength Y is a random variable and stress a constant value $X = x$ see Figure 5.2), then the reliability is

$$R = \Pr\{Y \geq x\} = 1 - F_Y(x) = \int_x^\infty f_Y(y)dy \tag{5.4}$$

If both stress X and strength Y are random variables, then the reliability is a probability that the stress will not exceed the strength

$$R = \Pr\{X < Y\} = \int_0^\infty F_X(y)f_Y(y)dy \tag{5.5}$$

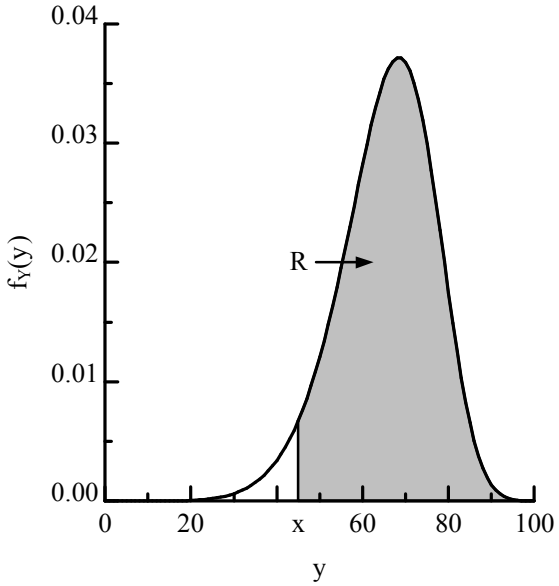

Figure 5.2. Reliability for constant stress and random strength.

or a probability that the strength will be greater than the stress

$$R = \Pr\{Y \geq X\} = \int_0^\infty (1 - F_Y(x)) f_X(x) dx \tag{5.6}$$

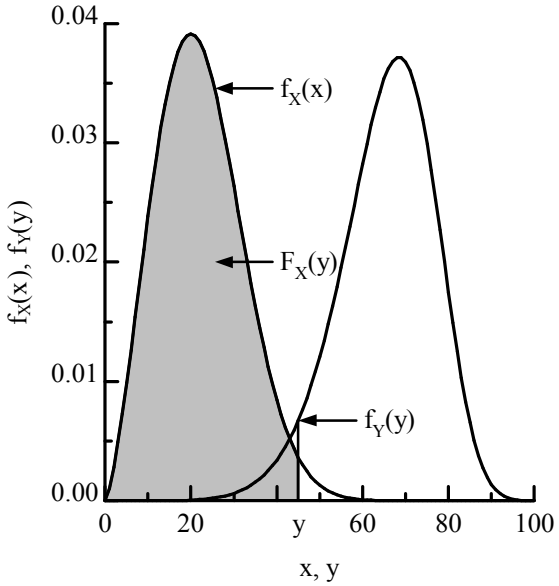

Figure 5.3. Reliability for random stress and strength.

If the stress and strength belong to the exponential probability density function

$$f_X(x) = \frac{1}{\mu_X} e^{-\frac{x}{\mu_X}} \qquad f_Y(y) = \frac{1}{\mu_Y} e^{-\frac{y}{\mu_Y}}$$

with a mean value of stress μ_X and a mean value of strength μ_Y then the reliability

μ_X/μ_Y	1.0	0.9	0.8	0.7	0.6	0.5	0.4	0.3	0.2	0.1
R	0.50	0.53	0.56	0.59	0.63	0.67	0.71	0.77	0.83	0.91

Tabel 5.1. Reliability for the exponential probability density function of stress and strength.

is

$$R = \frac{1}{\mu_X} \int_0^\infty \exp\left\{-\frac{\mu_X + \mu_Y}{\mu_X \mu_Y}\right\} dx = \frac{1}{1 + \mu_X/\mu_Y} \tag{5.7}$$

As obvious from Table 5.1,the value of μ_Y must be at least 10x greater than the value of μ_X in order for the reliability to exceed the value of 0.9.

5.3 Dynamic Models

Components for which the stress is changing over time requires separate treatment in which dynamic reliability is calculated. Stress may appear at completely random times or can be placed repetitively over time.

5.3.1 Periodic Loads

if we neglect the impact of aging and assume that in a moment t_i the component is loaded with a random load X_i having a probability density function of $f_X(x)$ and assume that random strength Y_i having a probability density function of $f_Y(y)$ is independent of time, then the dynamic reliability after n load cycles is

$$R_n = \Pr\{X_1 < Y_1, \ldots, X_n < Y_n\}$$

Since the events $X_1, X_2, \ldots$ in $Y_1, Y_2, \ldots$ statistically independent it applies

$$R_n = \Pr\{X_1 < Y_1\} \cdots \Pr\{X_n < Y_n\} = R^n \tag{5.8}$$

If the time period Δt is constant, $t_0 = 0$ and $t_i = t_{i-1} + \Delta t$ for $i = 1, 2, \ldots$, then the dynamic reliability can be calculated by

$$R(t) = R^{t/\Delta t} \tag{5.9}$$

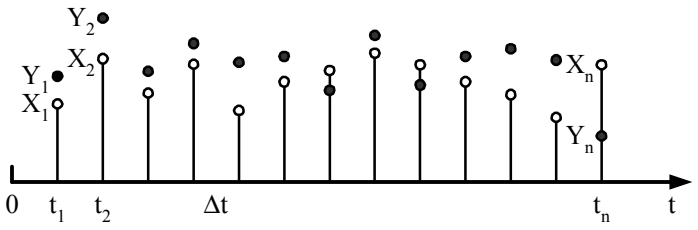

Figure 5.4. The stress time history and strength for a periodic load.

5.3.2 Random Loads

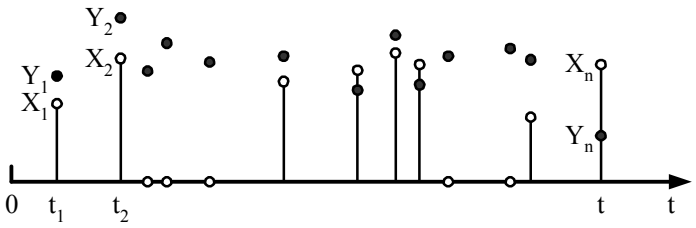

Figure 5.5. The stress time history and strength for a random load.

The probability that over the time t a component will be loaded i times correspond to a binomial probability density function

$$f_n(i) = \binom{n}{i} p^i (1-p)^{n-i} \tag{5.10}$$

If number of events $n \gg 1$ and probability p very small then the equation (5.10) can be approximated by Poisson probability density function

$$f_n(i) = e^{-pn} \frac{(pn)^i}{i!} \tag{5.11}$$

From mean period $\Delta t = t/n$ it follows $pn = (p/\Delta t)t = \alpha t$ where α is the mean number of loads per unit of time. From here it follows

$$f_i(t) = e^{-\alpha t} \frac{(\alpha t)^i}{i!} \tag{5.12}$$

Dynamic reliability is a weighted sum of all possible events

$$R(t) = \sum_{i=0}^{\infty} R^i f_i(t) = e^{-\alpha t} \sum_{i=0}^{\infty} \frac{(\alpha t R)^i}{i!} \tag{5.13}$$

Since

$$e^{\alpha t R} = \sum_{i=0}^{\infty} \frac{(\alpha t R)^i}{i!}$$

the reliability can be written as

$$R(t) = e^{-(1-R)\alpha t} \tag{5.14}$$

5.3.3 Random Fixed Stress and Strength

A different result is obtained if stress and strength are randomly determined once and then fixed for each cycle. We assume that the first stress X_1 and strength Y_1 are random variables and for all other realizations of stress and strength it follows

$$X_i = X_1 \vee 0 \quad Y_i = Y_1 \quad i = 1, 2, \ldots$$

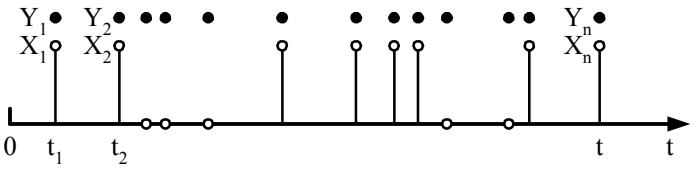

Figure 5.6. The load time history and strength for random fixed stress and strength.

From (5.13) the dynamic reliability is

$$R(t) = R^0 f_0(t) + \sum_{i=1}^{\infty} R^i f_i(t)$$

Because $R^i = R$ for each $i \geq 1$ it applies

$$R(t) = f_0(t) + R(1 - f_0(t)) = e^{-\alpha t} + R(1 - e^{-\alpha t}) \tag{5.15}$$

5.4 Physics of Failure Models

An alternative to static reliability models is called physics of failure where time to failure is expressed by a function

$t = f$(operating conditions,
environmental conditions,
material properties,
manufacturing technology,
geometry)

A typical representative of a physics of failure model is the calculation of expected operating time of the roller bearing

$$t = a_1 a_2 a_3 \frac{10^6}{60n} \left(\frac{C}{P}\right)^p$$

in hours where a_1 is a reliability factor, a_2 material factor, a_3 factor of operating conditions, n rotary speed in rev/min, p exponent, C dynamic load capacity and P equivalent stress in N.

Chapter 6

Design for Reliability

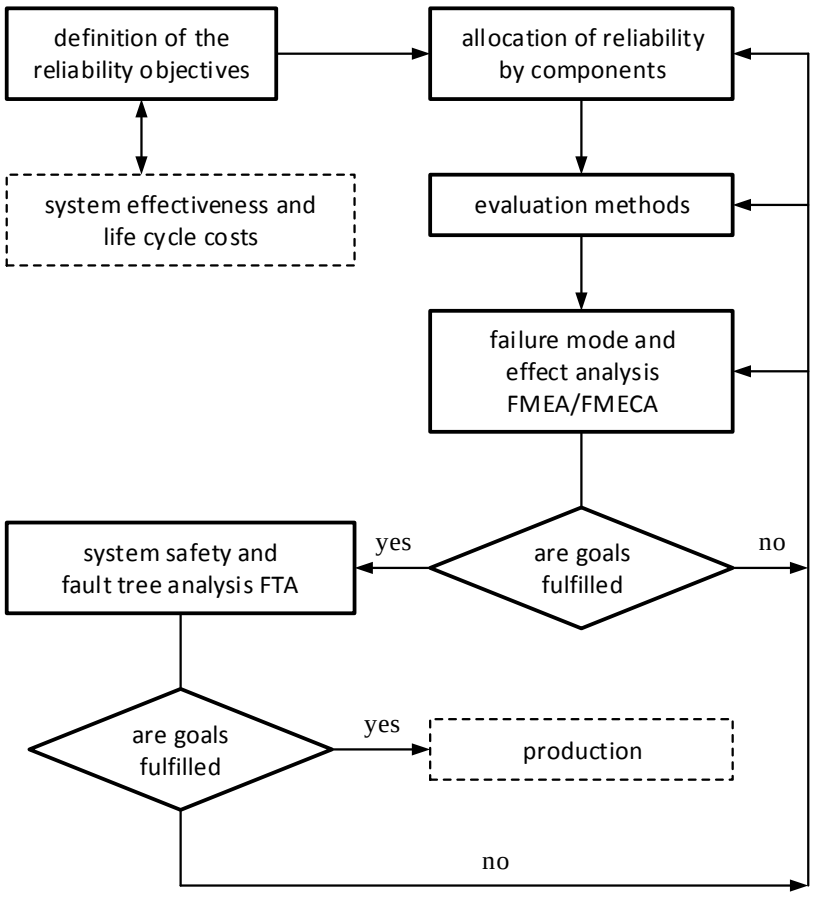

Figure 6.1. The reliability design process.

life cycle phases	activities related to reliability
conceiving	specification of reliability allocation of reliability evaluation methods
detailing optimization andtesting	evaluation methods FMEA testing reliability growth safety analysis and FTA
production	acceptance testing quality control burn-in testing and monitoring/screening
use and maintenance	preventive maintenance predictive maintenance modifications parts replacement

Tabel 6.1. Reliability and product life cycle phases.

6.1 Reliability Objectives

Reliability indicators:

- mean time to failure MTTF,
- mean time between failures MTBF,
- target reliability after a certain time and,
- probability density function of failures.

Other activities:

- it is necessary to define the failures precisely,
- to eliminate a certain type of failure from the requirements,
- to monitor and record operation and non-operation times and,
- precisely define normal operating, environmental and maintenance conditions.

acquisition costs	operations and support costs	remaining costs
- R&D costs	**operations costs**	- salvage value
- production	- personnel	- disposal costs
- distribution	- energy and fuel	
	failure costs	
	- waranty	
	- responsibility	
	- repair or replacement	
	- loss of trust	
	support costs	
	- repair resources	
	- supply resources	
	- support equipment or facilities	

Tabel 6.2. Costs categories.

6.1.1 Life Cycle Costs

In general life cycle costs are

$$\begin{aligned} \text{life cycle costs} = {} & \text{acquisition costs} \\ & + \text{operations costs} \\ & + \text{failure costs} \\ & + \text{support costs} \\ & - \text{net salvage value} \end{aligned} \tag{6.1}$$

where

$$\begin{aligned} \text{net salvage value} = {} & \text{salvage value} \\ & - \text{disposal costs} \end{aligned}$$

6.2 Reliability Allocation

Reliability allocation objective

$$R_{\mathrm{s}} = h(R_1(t), \ldots, R_n(t)) \geq R_{\mathrm{s}}^*(t) \tag{6.2}$$

In case of serially related components

$$R_{\mathrm{s}} = \prod_{i=1}^{n} R_i(t) \geq R_{\mathrm{s}}^*(t) \tag{6.3}$$

6.2.1 Exponential Case

If all components have constant failure rates, equation (6.3) can be written as

$$\prod_{i=1}^{n} e^{-\lambda_i t} \geq e^{-\lambda_s^* t}$$

or

$$\sum_{i=1}^{n} \lambda_i \leq \lambda_s^* \tag{6.4}$$

6.2.2 Optimal allocation

The objective of optimal allocation are minimal costs. We therefore need to solve the following

$$\min C = \sum_{i=1}^{n} C_i(x_i) \tag{6.5}$$

$$\prod_{i=1}^{n} (R_i + x_i) \geq R_s^* \tag{6.6}$$

at condition

$$0 < R_i + x_i \leq B_i < 1 \quad i = 1, \ldots, n \tag{6.7}$$

The function of costs for reliability improvement $C_i(x)$ can be approximated with a second order polynomial equation

$$\min C = \sum_{i=1}^{n} c_i x_i^2 \tag{6.8}$$

If we neglect (6.7) and equate both sides of the equation (6.6) we can determine optimal values of x_i using the Lagrange method

$$L(x_i, \theta) = \sum_{i=1}^{n} c_i x_i^2 - \theta \left\{ \prod_{i=1}^{n} (R_i + x_i) - R_s^* \right\} \tag{6.9}$$

Function extreme value $L(x_i, \theta)$ is then calculated by solving the equation system

$$\begin{aligned} \frac{\partial L(x_i, \theta)}{\partial x_i} &= 2c_i x_i - \theta \prod_{\substack{j=1 \\ j \neq i}}^{n} (R_j + x_j) = 0 \quad i = 1, \ldots, n \\ \frac{\partial L(x_i, \theta)}{\partial \theta} &= \prod_{i=1}^{n} (R_i + x_i) - R_s^* = 0 \end{aligned} \tag{6.10}$$

By multiplying the above equation with $(R_i + x_i)$ and a small rearrangement we get

$$\theta \prod_{i=1}^{n}(R_i + x_i) = 2c_i x_i(R_i + x_i) = \theta R_{\mathrm{s}}^*$$

From here it follows

$$2c_i x_i^2 + 2c_i R_i x_i - \theta R_{\mathrm{s}}^* = 0 \tag{6.11}$$

Solution of the square equation (6.11) is its positive root

$$x_i = \frac{-2c_i R_i + \sqrt{4c_i^2 R_i^2 + 8c_i \theta R_{\mathrm{s}}^*}}{4c_i} \tag{6.12}$$

6.2.3 ARINC Method

This method assumes that the components are in series, statistically independent and have constant failure rates. If λ_i is the current failure rate of the ith component and λ_{s}^* is the target system failure rate, then from weights

$$w_i = \frac{\lambda_i}{\sum_{i=1}^{n} \lambda_i}$$

we can calculate new failure rate for each component

$$\lambda_i = w_i \lambda_{\mathrm{s}}^*$$

6.2.4 AGREE Method

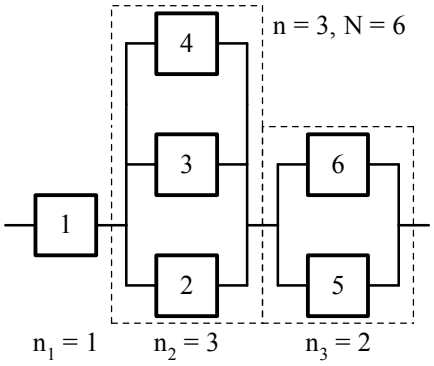

Figure 6.2. Block diagram of a complex system suitable for solving with AGREE method .

AGREE method (Advisory Group on Reliability of Electronic Equipment) assumes that a system is comprised of n components (see Figure 6.2) each having

n_i modules or sub-components. Let

$$\begin{aligned} t &= \text{system operating time} \\ R_{\mathrm{s}}^{*} &= \text{system reliability target at time } t \\ n &= \text{number of components} \\ N = \sum_{i=1}^{n} n_i &= \text{total number of modules in system} \\ t_i &= \text{operating time of } i\text{th component where } t_i \leq t \\ \lambda_i &= \text{failure rate of the } i\text{th component} \\ w_i &= \text{importance index} \end{aligned}$$

Because it applies

$$\prod_{i=1}^{n} R_{\mathrm{s}}^{*n_i/N} = R_{\mathrm{s}}^{*}$$

we can write the following

$$w_i(1 - e^{-\lambda_i t_i}) = 1 - R_{\mathrm{s}}^{*n_i/N}$$

Where the left side of the equation is the joined probability that the ith component fails and results in a system failure. The right side of the equation is the failure probability allocated to the ith component. From this it follows

$$\lambda_i = -\frac{1}{t_i} \ln \left\{ 1 - \frac{1 - R_{\mathrm{s}}^{*n_i/N}}{w_i} \right\} \qquad i = 1, \ldots, n \tag{6.13}$$

Because the failure of a component does not necessarily cause a system failure the following applies $\prod_{i=1}^{n} e^{-\lambda_i t_i} \leq R_{\mathrm{s}}^{*}$.

6.2.5 Redundancies

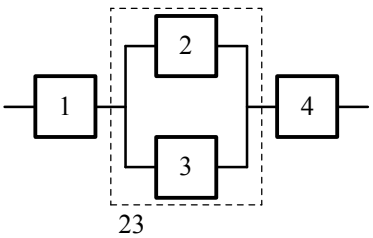

Figure 6.3. Block diagram of a system.

6.3 Design Methods

6.3.1 Parts and Material Selection

- standard parts or parts manufacturing,
- material properties are a function of various factors.

6.3.2 Derating

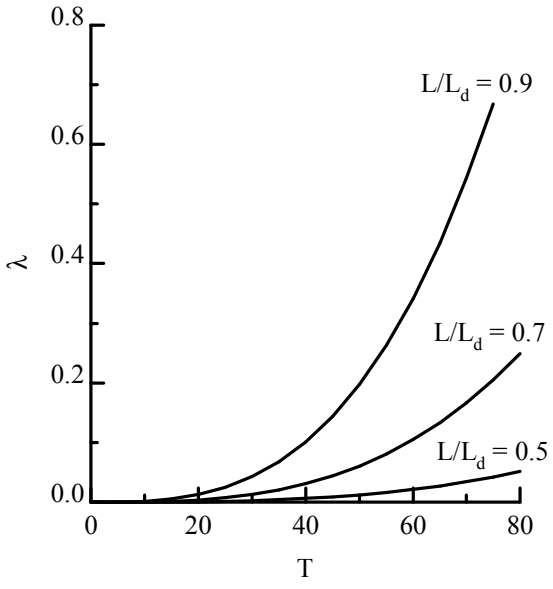

Figure 6.4. The influence of temperature and stress on failure rate.

$$\lambda = \lambda_{\mathrm{b}} \left(\frac{s}{s_{\mathrm{d}}}\right)^{0.7} \left(\frac{L}{L_{\mathrm{d}}}\right)^{4.69} \left(\frac{v_{\mathrm{d}}}{v}\right)^{0.54} \left(\frac{c}{c_{\mathrm{d}}}\right)^{0.67} \left(\frac{T}{T_{\mathrm{d}}}\right)^{3}$$

where

λ_b = failure rate defined by the manufacturer
s = operating speed
s_d = design speed
L = operating load
L_d = design load
υ = viscosity of lubricant used
υ_d = viscosity of specified lubricant
c = concentration of contaminants
c_d = standard contamination level
T = operating temperature
T_d = design temperature

6.3.3 Stress Strength Analysis

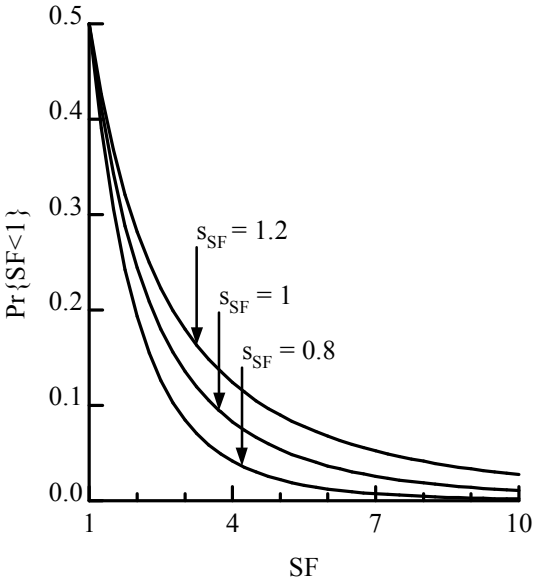

Figure 6.5. Failure probability and safety factor.

Safety factor SF and safety margin SM

$$\mathrm{SF} = \frac{Y}{X} \quad \mathrm{SM} = Y - X \tag{6.14}$$

Probability of a system failure as a function of the safety factor

$$\Pr\{\mathrm{SF} < 1\} = 1 - \Phi\left(\frac{\ln \mathrm{SF}}{s_{\mathrm{SF}}}\right) \tag{6.15}$$

where

$$\mathrm{SF} = \frac{m_y}{m_x} \quad s_{\mathrm{SF}} = \sqrt{s_x^2 + s_y^2}$$

6.3.4 Complexity and Technology

- part count of the system,
- variability of used parts in the system,
- technology.

6.3.5 Redundancy

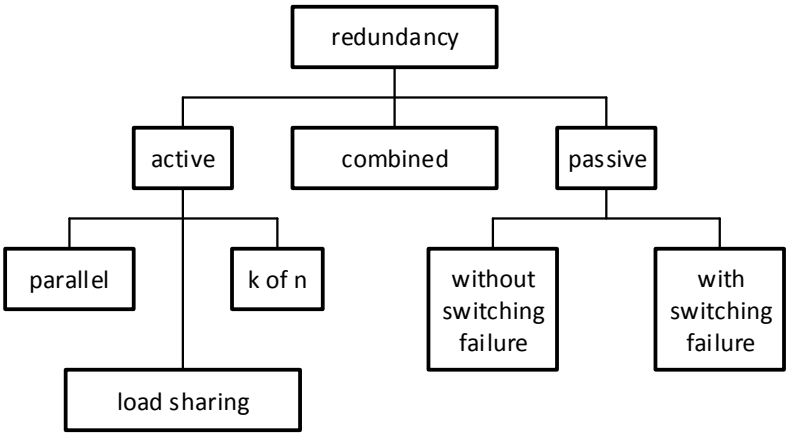

Figure 6.6. A classification of redundancy.

Optimization of active redundancy based on the costs

$$\max \prod_{i=1}^{n} \{1 - (1 - R_i(t))^{n_i}\} \tag{6.16}$$

at the condition

$$\sum_{i=1}^{n} C_{\mathrm{u},i} n_i \leq B + \sum_{i=1}^{n} C_{\mathrm{u},i} \tag{6.17}$$

1 $C := 0$; $n_i := 1$ za $i := 1, \ldots, n$;
2 $s :=$ false; Calculate Δ_i za $i := 1, \ldots, n$;
3 **while** $s :=$ false **do**
4 $k :=$ maxarg $\{\Delta_1, \ldots, \Delta_n\}$; $C := C + C_{\mathrm{u},k}$;
5 **if** $C < B$ **then**
6 $n_k := n_k + 1$; Calculate Δ_k;
7 **else**
8 $s :=$ true; $C := C - C_{\mathrm{u},k}$;
9 **end if**
10 **end while**

Figure 6.7. Marginal analysis.

Optimal number of redundant components is determined using the marginal analysis which requires the separation of control variables n_i. This is achieved by logarithm of the equation (6.16)

$$\max \sum_{i=1}^{n} \ln \{1 - (1 - R_i(t))^{n_i}\} \tag{6.18}$$

Because logarithm is a monotonically increasing function, transformation (ref eq6:3:5:3) does not affect the position of the optimum. Marginal value

$$\Delta_i = \frac{\ln \{1 - (1 - R_i(t))^{n_i+1}\} - \ln \{1 - (1 - R_i(t))^{n_i}\}}{C_{\mathrm{u},i}}$$

is defined as the increase in the logarithm of the component reliability per dollar investment for increasing the number of parallel components for one.

6.4 Failure and Effect Analysis

Failure mode and effect analysis FMEA is an iterative process that influences design by identifying failure modes, assessing their probabilities of occurrence and their effect on the system, isolating their causes and determining corrective action or preventive measures. Main purpose of such analysis is to increase safety and customer satisfaction. The company's management needs to precisely define the constraints within which the FMEA process will take place. There is a need to answer a series of questions.

- Is the FMEA team responsible only for carrying out the analysis, or should it also prepare proposals and/or implement improvements?
- What is the team budget?
- What other resources are available to the group?
- Is the date for carrying out the analysis determined and whether there are other time constraints that need to be taken into account?
- What is the procedure if the group has to exceed the limits?
- How should the group inform the other entities of the company with the results of the analysis?

FMEA of a product or a process consists of 10 steps

- review of the process,
- identification of the potential failure modes,
- identification of potential effects of each failure mode,
- assigning a severity rating for each failure mode,

FMEA number: 019 Date started: 05.03.02

Date completed:

Team members: Martin M. Andrej N. Marta L.

Boštjan V. Franc G.

Team leader: Martin M.

1. Are all affected areas represented?
   Yes No Action:
2. Are different levels and types of knowledge represented on the team?
   Yes No Action:
3. Is the customer involved?
   Yes No Action: Sales and marketing represent the customer.
4. Who will take minutes and maintain records? Andrej N.

FMEA team boundaries of freedom

5. What aspects of the FMEA is the team responsible for?.
   FMEA Analysis Improvement recommendations Improvemnt implementation
6. What is the budget of the FMEA? 5000 EUR
7. Does the project have a deadline? 15.04.02
8. Do team members have specific time constraints?
9. What is the procedure if the team needs to expand beyond boundaries?
   Revision of restrictions with the department head.
10. How should the ŽFMEA be communicated with others?
    Final report.
11. What is the scope of the FMEA?
    Perform the FMEA analysis for the new model of fire extinguisher X-1050.
    The analysis must be completed before the 01.05.02.

Figure 6.8. FMEA team start-up worksheet.

- assigning an occurrence rating for each failure mode,
- assigning a detection rating for each failure mode and/or effect,
- calculation of the risk priority number (RPN) for each effect,
- prioritizing the failure modes for action,
- taking action to eliminate or reduce the high risk failure modes and
- calculation of the resulting RPN as the failure modes are reduced or eliminated.

6.4.1 Review of the Process

To ensure that everyone on the FMEA team has the same understanding of the process that is being worked on, the team should review a blueprint of the product

Subject (product / process): fire extinguisher X-1050 FMEA number: 019

FMEA team: fire extinguisher X-1050 FMEA team FMEA date (original): 05.03.02 (revised): 01.05.02

Team leader: Martin M. Page: 1 of 2

Item and function	Potential failure mode	Potential effect(s) of failure	S	C	Potential cause(s) of failure	O	Current controls: prevention	Current controls: detection	D	RPN	Recommended action	Responsibility and target completion	Action taken	S	O	D	RPN
tube	cracks	it does not trigger at activation	10		Exposure to high heat or frost during transportation	5	- use of insulation materials for packaging - transportation in climatically controlled conditions		6	300	use of temperature non-sensitive material	Martin M. 01.04.02	replacement of current tube with the temperature non-sensitive tube	10	2	6	120
	holes	low output pressure	8		Damage of the tube during the production	8	- no sharp object allowed in the production process		4	256	protection of tubes with a Kevlar coating	Marta L. 15.04.02	purchase of protective coatings for tube	8	5	4	160
	clogging	no output	10		foreign object in the tube	6		- input control - test using compressed air	3	180				10	6	3	180
cylinder																	
valve mechanism																	
level indicator																	

Figure 6.9. FMEA of a product/process.

if they are conducting a product FMEA, or a detailed flowchart of the operation if they are conducting a process FMEA.

6.4.2 Identification of the Potential Failure Modes

potential cause of failure	potential failure mode	potential failure effect
biological effects	putrefaction	degradation
cyclical fatigue	fatigue damage	unstable drive
human error	delayed reaction	airplane accident
degradation	magnetic degradation	drop of permeability
depolimerizacija	short circuit	drop of resistance
evaporation	filament breakage	lamp failure
exceptional load	lightning strike	radio transmission failure
chemical and electrolytic changes	electrolytic corrosion	loss of contact
contact failure	bad contact	relay does not work
corrosion	corrosin defects	leaking of the tank
creep	deformation	bad guidance
mechanical loads	sudden breakage	power loss and increased noise
low-quality components	spillage of brake liquid	no brake force
pollution	loss of contact	voltage drop
temperature fluctuation	fatigue damage	pressure drop
friction	wear	Loses and noise
moisture	steaming up	bad visibility

Tabel 6.3. Potential causes of failure, failure modes and effects.

6.4.3 Identification of Potential Effects of Each Failure Mode

In identifying the potential effects of the failure, we are wondering what might the consequences of each failure mode be. This step must be thorough, because this information will feed into the assignment of risk ratings for each of the failure.

6.4.4 Assigning a Severity Rating for Each Failure Mode

The severity rating S is based on a 10-point scale, with 1 being the lowest rating and 10 being the highest. It is an estimation of how serious the effect would be if a given failure did occur. Because each failure may have several different effects, and each effect can have different level of severity, it is the effect, not the failure, that is rated.

	Severity rating S		Occurrence rating O		Detection
rating	description	definition	description	frequency	rating D
10	dangerously high	Failure could injure the customer or an employee without a warning.	very high: failure almo-	≥ 100 per 1000	almost uncertain
9	extremely high	Failure would create noncomplience with federal regulations.	st inevitable	50 per 1000	very remote
8	very high	Failure renders the unit inoperasble or unfit for use.	high: repeated	20 per 1000	remote
7	high	Failure causes a high degree of customer dissatisfaction.	failures	10 per 1000	very low
6	moderate	Failure results in a subsystem or partial malfunction of the product.	moderate: occasional	5 per 1000	low
5	low	Failure creates enough of a performance loss to cause the customer to complain.	failures	2 per 1000	moderate
4	very low	Failure can be overcome with modifications to the customer‘s process or product with minor perf. loss.		1 per 1000	moderately high
3	minor	Failure would create a minor nuisance to the customer but the customer can overcome it without perf. loss.	low: relatively	0.5 per 1000	high
2	very minor	Failure may not be readily apparent to the customer, but would have minor effect onthe process or product.	few failures	0.1 per 1000	Very high
1	none	Failure would not be noticable to the customer.	remote:	≤ 0.01 per 1000	almost certain

Tabel 6.4. Recommendations for Severity, Occurrence and Detection rating scales.

6.4.5 Assigning an Occurrence Rating for Each Failure Mode

The occurrence rating O is based on a 10-point scale and it specifies the probability for a certain failure mode to appear in the system or process life time. In the assessment phase, the team tries to answer various questions.

- What is the frequency of failures of similar components that are still on the market?
- Is the considered component similar to the previous generation of components?
- What changes have been made when switching from previous to new generation?
- Is it a completely different or even completely new component?
- Has the operating conditions and/or environmental conditions changed?
- Has a statistical assessment of the probability of failure occurrence been carried out?

6.4.6 Assigning a Detection Rating for Each Failure Mode and/or Effect

The detection rating D is based on a 10-point scale and it looks how likely we are to detect a failure or the effect of a failure. We start this step by identifying current controls that may detect a failure or effect of a failure.

6.4.7 Calculation of the Risk Priority Numbe

The risk priority number (RPN)indexrisk priority number is simply calculated by multiplying the severity rating S times the occurrence rating O times the detection rating D for all of the items.

$$\text{RPN} = S \times O \times D \tag{6.19}$$

it is a number between 1 and 1000. Because in the process of valuation of S, O and D there are differences between the members of the group, it is worthwhile to use one of the following techniques to achieve consensus

- vote in the group,
- inclusion of an expert,
- postponing the decision to one of the team members,

- classification of failures and/or effects by size according to S, O or D,
- prolonged debate or,
- voting for higher RPN value.

6.4.8 Prioritizing the Failure Modes for Action

The failure modes can now be prioritized by ranking them in order from the highest RPN number to the smallest. A Pareto diagram is helpful to visualize the differences between the various ratings. The team must now decide which items to work on. Usually the team sets a cut-off RPN, where any failure modes with a RPN above that point are attended to.

6.4.9 Taking Action to Eliminate or Reduce the High Risk Failure Modes

Using an organized problem solving process the team identify and implement actions to eliminate or reduce the high risk failure modes. The following are the measures that can contribute to the reduction of the RPN index:

S Use of personal protective equipment (helmet, safety glasses, protective gloves). Safety switches. Use of materials such as Safety glass that does not cause such serious damage in case of failure.

O Increase the process performance index C_{pk} using test design and/or modification methods. Process of continuous improvement. Use of the mechanisms to be activated in order for the product or process to work (example: the garden lawnmower has a lever that needs to be pressed constantly during operation).

D Statistical control of the process. Use of regularly calibrated measuring devices. Preventive maintenance as a means of timely detection of potential defects. Using encoding (colors and shapes) that informs the user about what is right and what is not.

6.4.10 Calculation of the Resulting RPN

Once action has been taken to improve the product or process, new ratings for severity, occurrence and detection should be determined and a resulting RPN calculated.

6.5 System Safety and Fault Tree Analysis

Reliability and product safety are closely related. Safety is a state of the product that does not lead to injuries, loss of life, or severe damage to equipment and harmful consequences for the environment (MIL-STD-882). The safety analysis is carried out primarily in cases where a certain type of failure could lead to catastrophic consequences for humans or the environment. The aim of the analysis is to determine the types, probability of realization and corrective measures for potential disasters with catastrophic consequences. Since the probability of realization of these events is often very low, and because such failures are predominantly due to the sequence of several events, the fault tree analysis (FTA) is used to detect and quantify them.

6.5.1 Fault Tree Analysis

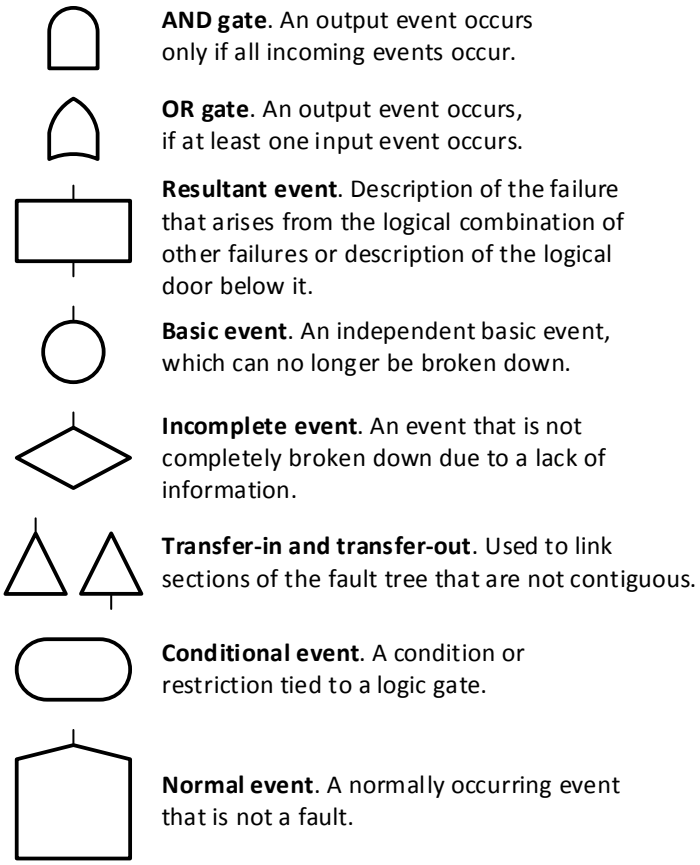

Figure 6.10. Symbols of fault tree analysis.

A fault tree analysis is a graphical design technique for detection of potential failures that could lead to catastrophic consequences. There are four major steps to a fault tree analysis:

- definition of the system, its boundaries and the top event,

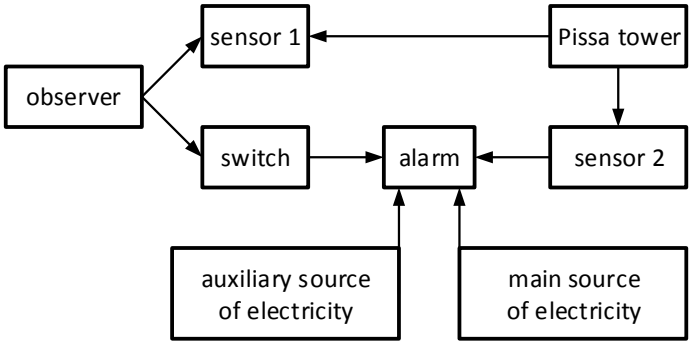

Figure 6.11. Alarm device diagram.

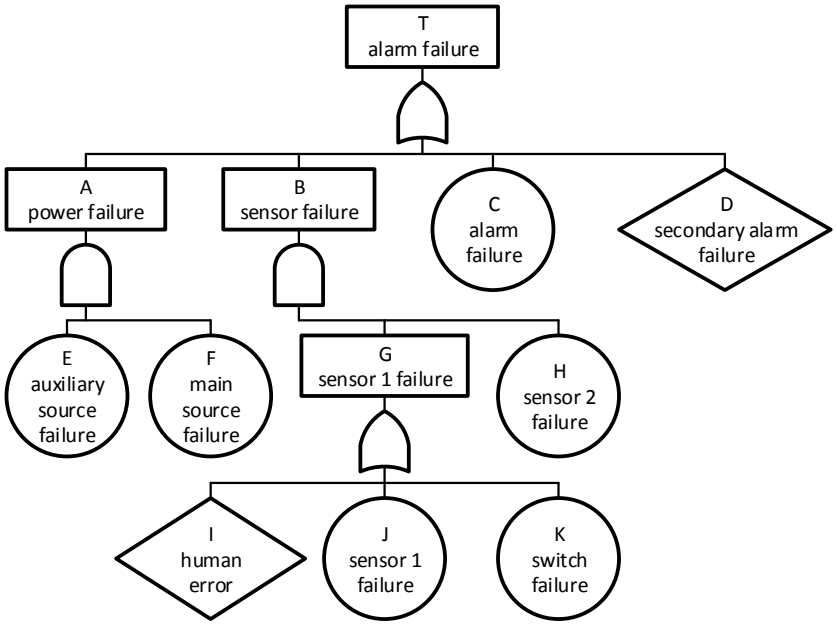

Figure 6.12. The alarm system fault tree.

- construction of the fault tree,
- qualitative evaluation by identifying those combinations of events that will cause the top event and
- quantitative evaluation by assigning failure probabilities or unavailabilities to the basic events and computing the probability of the top event.

Faults can be classified as primary, secondary and command. Faults may also be classified as active or passive.

The top event T can be expressed as a function of basic and incomplete events

$$\begin{aligned} T &= A \cup B \cup C \cup D \\ &= (E \cap F) \cup (G \cap H) \cup C \cup D \\ &= (E \cap F) \cup ((I \cup J \cup K) \cap H) \cup C \cup D \end{aligned} \tag{6.20}$$

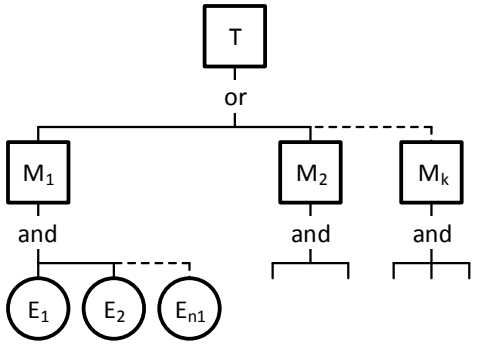

Figure 6.13. Equivalent tree of minimal cut sets.

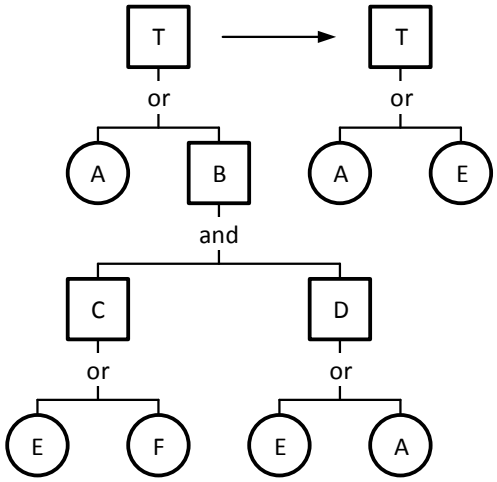

Figure 6.14. A fault tree and an equivalent fault tree.

6.5.2 Minimal Cut Sets

Minimal cut set is a minimal set of basic events that cause the top event. If M_i is ith minimal cut set the top event T can be expressed as union of all k minimal cut sets

$$T = M_1 \cup M_2 \cup \cdots \cup M_k \tag{6.21}$$

where $M_i = E_1 \cap E_2 \cap \cdots \cap E_{ni}$ and E_i are basic events.

iteration		(a)
1	2	3
A	E,F	E,F
B	G,H	I,H
C	C	J,H
D	D	K,H
		C
		D

iteration				(b)
1	2	3	4	5
A	A	A	A	A
B	C,D	E,D	E,E	E
		F,D	E,A	
			F,E	
			F,A	

Figure 6.15. Minimal cut sets examples: Figure 6.12 (a) and Figure 6.14 (b).

6.5.3 Quantitative Analysis

In the context of quantitative analysis, we estimate the probability of realization of the top event under the condition that the probabilities of realizations of basic and incomplete events are known. To help with the analysis we can use a tree of minimal cut sets, since it applies

$$P(T) = P(M_1 \cup M_2 \cup \cdots \cup M_k) \tag{6.22}$$

If minimal cut sets represent unrelated events we can write

$$P(T) = P(M_1) + P(M_2) + \cdots + P(M_k) \tag{6.23}$$

and if basic events E_i are statistically independent we can write

$$P(M_i) = P(E_1 \cap E_2 \cap \cdots \cap E_{ni}) = P(E_1)P(E_2)\cdots P(E_{ni}) \tag{6.24}$$

Because the probabilities $P(M_i)$ are small, the equation (6.23) gives satisfactory results even in case of related events.

Chapter 7

Maintainability

We distinguish between:

- reactive,
- preventive and,
- predictive maintenance.

7.1 Analysis of Downtime

Delay time in the logistic support includes:

- waiting time for spare parts,
- initial administrative time,
- initial production or purchasing time,

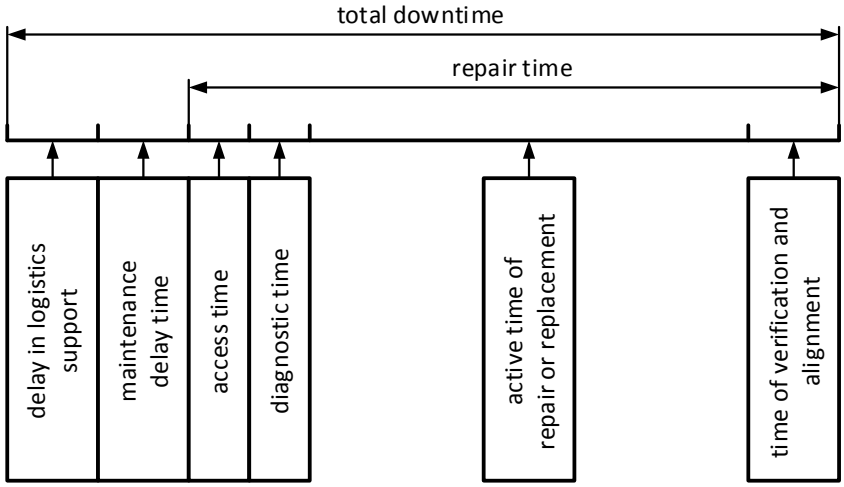

Figure 7.1. Breakdown of maintenance downtime.

- maintenance time and,
- time of the transport.

Maintenance delay time includes:

- waiting time for available maintenance resources,
- waiting time for available maintenance facilities,
- administrative (notification) time and,
- travel time.

Maintenance resources includes:

- personnel,
- test and support equipment,
- tools,
- manuals or other technical data.

Maintenance facilities may be:

- repair dock,
- service bay,
- fixed test stand and,
- and other facilities.

7.2 The Repair Time Distribution

Let T be the continuous random variable representing the time to repair a failed unit, having a probability density function of $h(t)$ and cumulative distribution function of

$$\Pr\{T < t\} = H(t) = \int_0^t h(t)dt \tag{7.1}$$

The mean time to repair may be found from

$$\text{MTTR} = \int_0^\infty th(t)dt = \int_0^\infty (1 - H(t))dt \tag{7.2}$$

and the variance of the repair distribution from

$$\sigma^2 = \int_0^\infty (t - \text{MTTR})^2 h(t)dt \tag{7.3}$$

If the repair distribution function is exponential with $h(t) = re^{-rt}$ and the rate of repair $r = 1/\text{MTTR}$ then it applies

$$H(t) = \int_0^t \frac{e^{-t/\text{MTTR}}}{\text{MTTR}} dt = 1 - e^{-t/\text{MTTR}} \tag{7.4}$$

To represent the repair distribution often log-normal distribution is used

$$h(t) = \frac{1}{\sqrt{2\pi}ts} \exp\left\{-\frac{1}{2}\frac{(\ln(t/t_{\text{med}}))^2}{s^2}\right\} \tag{7.5}$$

where t_{med} is the median time to repair and s shape parameter. The probability of a repair being finished in time t is found by utilizing the relationship between the normal and log-normal distributions

$$\Pr\{T < t\} = H(t) = \Phi\left(\frac{1}{s}\ln\frac{t}{t_{\text{med}}}\right) \tag{7.6}$$

The mean time to repair is defined by

$$\text{MTTR} = t_{\text{med}} e^{s^2/2} \tag{7.7}$$

7.3 System Repair Time

let MTTR_i be the mean time to repair of the ith component, $m_{\text{um}i}$ be the expected number of unexpected repairs of the ith component over the system design life and q_i the number of identical components of type i. Then the system mean time to repair can be expressed as a weighted sum

$$\text{MTTR}_{\text{s}} = \frac{\sum_{i=1}^{n} q_i m_{\text{um}i} \text{MTTR}_i}{\sum_{i=1}^{n} q_i m_{\text{um}i}} \tag{7.8}$$

The expected number of unexpected repairs of the ith component is

$$m_{\text{um}i} = \begin{cases} \frac{t_{oi}}{\text{MTBF}_i} & \text{for renewal process} \\ \int_0^{t_{oi}} \rho_i(t)dt & \text{for minimal repair} \end{cases}$$

Let us consider k from n redundant system. repair in such a case can be carried out in various ways:

- repair of the component immediately after a failure,
- repair of one component after a failure of $n - k + 1$ n components,
- repair of one component while maintaining all other operating components after a failure of $n - k + 1$ n components,
- repair of all faulty components while maintaining all other components after a failure of $n - k + 1$ n components.

7.4 Reliability under Preventive Maintenance

The reliability over the first and the second preventive maintenance intervals is

$$R_{\mathrm{pm}}(t) = R(t) \qquad \text{za } 0 \le t < T_{\mathrm{pm}}$$
$$R_{\mathrm{pm}}(t) = R(T_{\mathrm{pm}})R(t - T_{\mathrm{pm}}) \qquad \text{za } T_{\mathrm{pm}} \le t < 2T_{\mathrm{pm}}$$

where $R(T_{\mathrm{pm}})$ is the probability of survival until the first preventive maintenance and $R(t - T_{\mathrm{pm}})$ is the probability to survive the additional time $t - T_{\mathrm{pm}}$ given that the system was restored to its original condition at time T_{pm}. In general it applies

$$R_{\mathrm{pm}}(t) = R^i(T_{\mathrm{pm}})R(t - iT_{\mathrm{pm}}) \quad \text{za } iT_{\mathrm{pm}} \le t < (i+1)T_{\mathrm{pm}} \tag{7.9}$$

where $R^i(T_{\mathrm{pm}})$ is the probability of survival until the ith preventive maintenance and $R(t - iT_{\mathrm{pm}})$ is the probability to survive the additional time $t - iT_{\mathrm{pm}}$. The

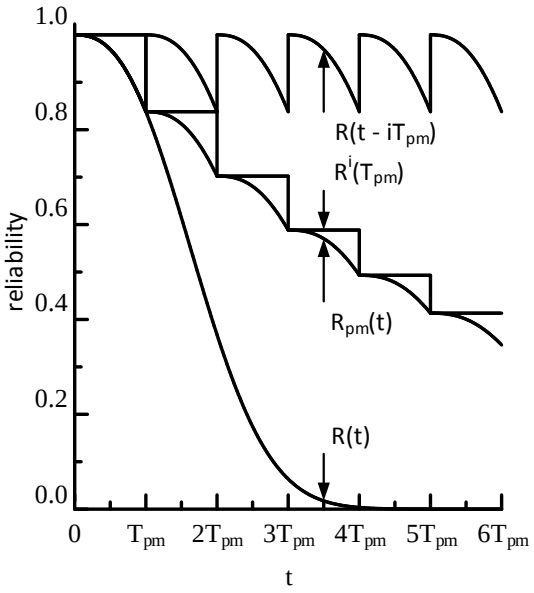

Figure 7.2. The influence of preventive maintenance on reliability (increasing failure rate).

MTTF under preventive maintenance can be calculated as

$$\begin{aligned}\mathrm{MTBF} = \int_0^\infty R_{\mathrm{pm}}(t)dt &= \sum_{i=0}^{\infty} \int_{iT_{\mathrm{pm}}}^{(i+1)T_{\mathrm{pm}}} R_{\mathrm{pm}}(t)dt \\ &= \sum_{i=0}^{\infty} R^i(T_{\mathrm{pm}}) \int_{iT_{\mathrm{pm}}}^{(i+1)T_{\mathrm{pm}}} R(t - iT_{\mathrm{pm}})dt \\ &= \sum_{i=0}^{\infty} R^i(T_{\mathrm{pm}}) \int_0^{T_{\mathrm{pm}}} R(t)dt\end{aligned}$$

In some preventive maintenance situations there is a possibility of a maintenance-induced failure where p is the probability of a maintenance-induced failure during

an individual preventive maintenance. The reliability after i preventive maintenance procedures taking into account probability p is

$$R_{\mathrm{pm}}(t) = R^i(T_{\mathrm{pm}})(1-p)^i R(t - iT_{\mathrm{pm}}) \quad \text{za } iT_{\mathrm{pm}} \leq t < (i+1)T_{\mathrm{pm}}$$

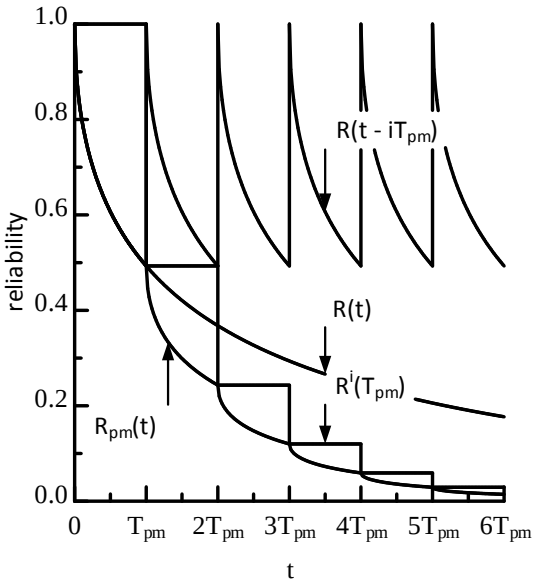

Figure 7.3. The influence of preventive maintenance on reliability (decreasing failure rate).

7.5 Stochastic Point Processes

Relationships between individual random variables are given by equations

$$Y_i = X_i + S_i = T_i - T_{i-1} \quad T_i = \sum_{j=1}^{i} Y_j \tag{7.10}$$

Let us also write the expected values of the operating times and down-times

$$E[X_i] = \mathrm{MTBF} \quad E[S_i] = \mathrm{MTTR} \tag{7.11}$$

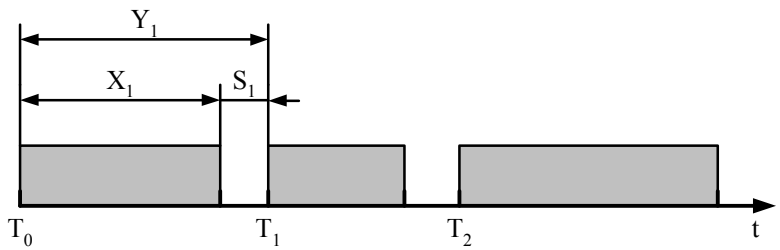

Figure 7.4. An example of a time frame of a component state.

7.5.1 Renewal Process

If $S_i \approx 0$ then random variable X_i is operating time between $i-1$ in ith failure, and random variable T_i operating time until ith failure. If random variables X_i are statistically independent having the same probability density distribution of failures $f(t)$, then the probability distribution of operating times T_i for $i \to \infty$ converges to normal probability density function

$$f_i(t) = \frac{1}{\sqrt{2\pi}\sigma_i} \exp\left\{-\frac{(t-\mu_i)^2}{2\sigma_i^2}\right\} \tag{7.12}$$

with the mean value of

$$\mu_i = E[T_i] = \sum_{j=1}^{i} E[X_j] = iE[X_i] = i\text{MTBF} \tag{7.13}$$

and variance of

$$\begin{aligned}
\sigma_i^2 &= E[(T_i - i\text{MTBF})^2] \\
&= E[(\sum_{j=1}^{i}(X_j - \text{MTBF}))^2)] \\
&= \sum_{j=1}^{i}\sum_{k=1}^{i} E[(X_j - \text{MTBF})(X_k - \text{MTBF})] \\
&= \sum_{j=1}^{i} E[(X_j - \text{MTBF})^2] = i\sigma^2
\end{aligned} \tag{7.14}$$

since it applies

$$E[(X_j - \text{MTBF})(X_k - \text{MTBF})] = 0 \quad j \neq k$$

Stochastic point process can also be expressed by number of failure in time interval $[0,t]$.Let $N(t)$ be a discrete random variable which gives a cumulative number of failures in the interval $[0,t]$. Then it follows

$$\begin{aligned}
\Pr\{N(t)=0\} &= \Pr\{T_1 > t\} \\
\Pr\{N(t)=i\} &= \Pr\{T_i \leq t < T_{i+1}\} \\
&= \Pr\{T_i \leq t\} - \Pr\{T_{i+1} \leq t\} \\
&= F_i(t) - F_{i+1}(t)
\end{aligned} \tag{7.15}$$

where cumulative distribution function is

$$F_0(t) = \begin{cases} 0 & \text{za } t \leq 0 \\ 1 & \text{za } t > 0 \end{cases}$$

or

$$F_i(t) = \int_0^t F_{i-1}(t-u)f(u)du \quad i = 1, 2, \ldots$$

7.5.1.1 Homogeneous Poisson Process

If

$$f(t) = \lambda e^{-\lambda t} \tag{7.16}$$

with a failure rate of $\lambda = 1/\text{MTBF}$ then it applies

$$F_0(t) = 1$$
$$F_1(t) = 1 - e^{-\lambda t}$$
$$F_2(t) = 1 - e^{-\lambda t} - \lambda t e^{-\lambda t}$$
$$F_3(t) = 1 - e^{-\lambda t} - \lambda t e^{-\lambda t} - \frac{(\lambda t)^2}{2} e^{-\lambda t}$$

from which a general form of the cumulative distribution function can be generated

$$F_i(t) = 1 - \sum_{j=0}^{i-1} \frac{(\lambda t)^j}{j!} e^{-\lambda t} \quad i = 0, 1, \ldots \tag{7.17}$$

From here it follows

$$\Pr\{N(t) = i\} = \sum_{j=0}^{i} \frac{(\lambda t)^j}{j!} e^{-\lambda t} - \sum_{j=0}^{i-1} \frac{(\lambda t)^j}{j!} e^{-\lambda t} = \frac{(\lambda t)^i}{i!} e^{-\lambda t} \tag{7.18}$$

7.5.1.2 Renewal Function

The renewal function provides the expected number of failures at time t

$$m(t) = \sum_{i=1}^{\infty} i \Pr\{N(t) = i\} \tag{7.19}$$

if in equation $\Pr\{N(t) = i\}$ is replaced by $F_i(t) - F_{i+1}(t)$, we get

$$m(t) = \sum_{i=1}^{\infty} F_i(t) \tag{7.20}$$

7.5.2 Minimal Repair process

Aging of the product can be considered as a stochastic point process and it is expressed with the intensity function

$$\rho(t) = \frac{dE[N(t)]}{dt} \tag{7.21}$$

The intensity and renewal functions are related since it applies

$$m(t) = E[N(t)] = \int_0^t \rho(t) dt \tag{7.22}$$

7.5.3 Overhaul

If the probability density distribution of failures $f(t)$ is known, then the expected period of the overhaul is

$$\begin{aligned} E[T_{\text{ov}}] &= R(T_{\text{pm}})E[t|t \geq T_{\text{pm}}] + F(T_{\text{pm}})E[t|t < T_{\text{pm}}] \\ &= R(T_{\text{pm}})T_{\text{pm}} + F(T_{\text{pm}}) \int_0^{\infty} tf(t|t < T_{\text{pm}})dt \end{aligned}$$

Because from Bayes's theorem it follows

$$f(t|t < T_{\text{pm}}) = \begin{cases} 0 & \text{za } t \geq T_{\text{pm}} \\ \frac{f(t)}{F(T_{\text{pm}})} & \text{za } t < T_{\text{pm}} \end{cases}$$

we can finally write

$$E[T_{\text{ov}}] = R(T_{\text{pm}})T_{\text{pm}} + \int_0^{T_{\text{pm}}} tf(t)dt = \int_0^{T_{\text{pm}}} R(t)dt \tag{7.23}$$

Calculation of the expected period of the overhaul in case of the exponential probability density distribution of the failure

$$E[T_{\text{ov}}] = \int_0^{T_{\text{pm}}} e^{-\lambda t}dt = \frac{1}{\lambda}(1 - e^{-\lambda T_{\text{pm}}})$$

with $\lambda = 0.00001h^{-1}$ and overhaul period of $T_{\text{pm}} = 10000$h is shown in Figure 7.5.

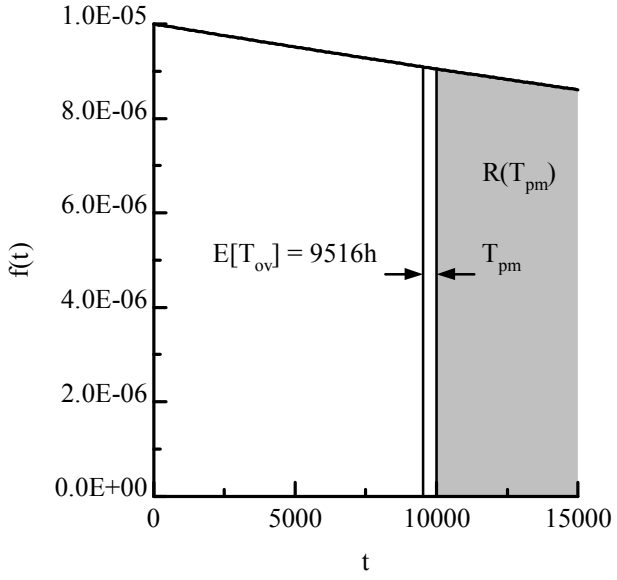

Figure 7.5. Example of the overhaul period calculation.