

Univerza v Ljubljani
Fakulteta za strojništvo

Katedra za strojne elemente
in razvojna vrednotenja

LABORATORIJ ZA VREDNOTENJE KONSTRUKCIJ

LABORATORIJ ZA STROJNE ELEMENTE

# *Vehicle's equation of motion*

Prof. dr. Jernej Klemenc

Univerza v Ljubljani
Fakulteta za strojništvo

# Coordinate system of a vehicle

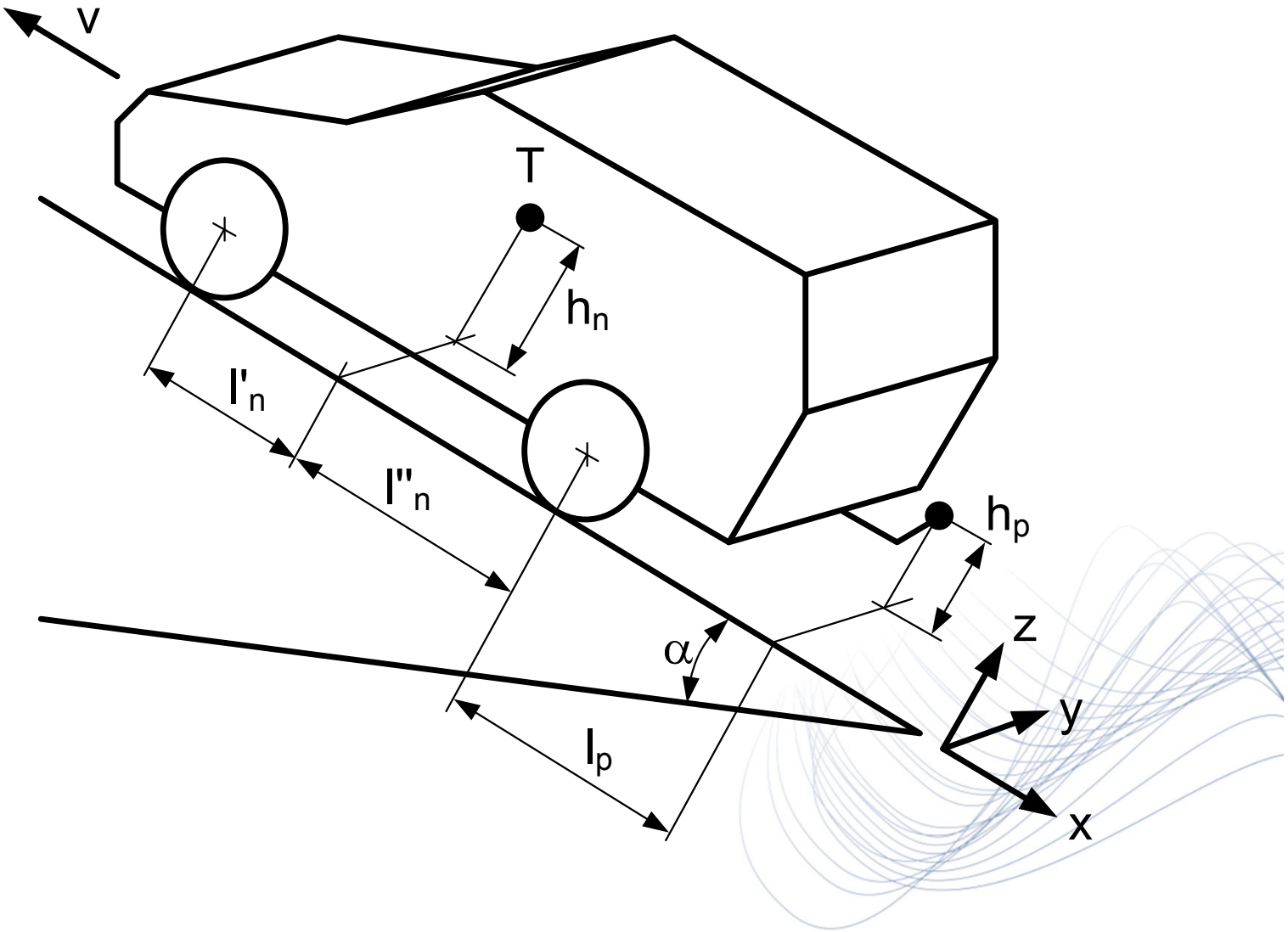

Univerza v Ljubljani
Fakulteta za strojništvo

# Forces that act on a vehicle in a X-Z plane

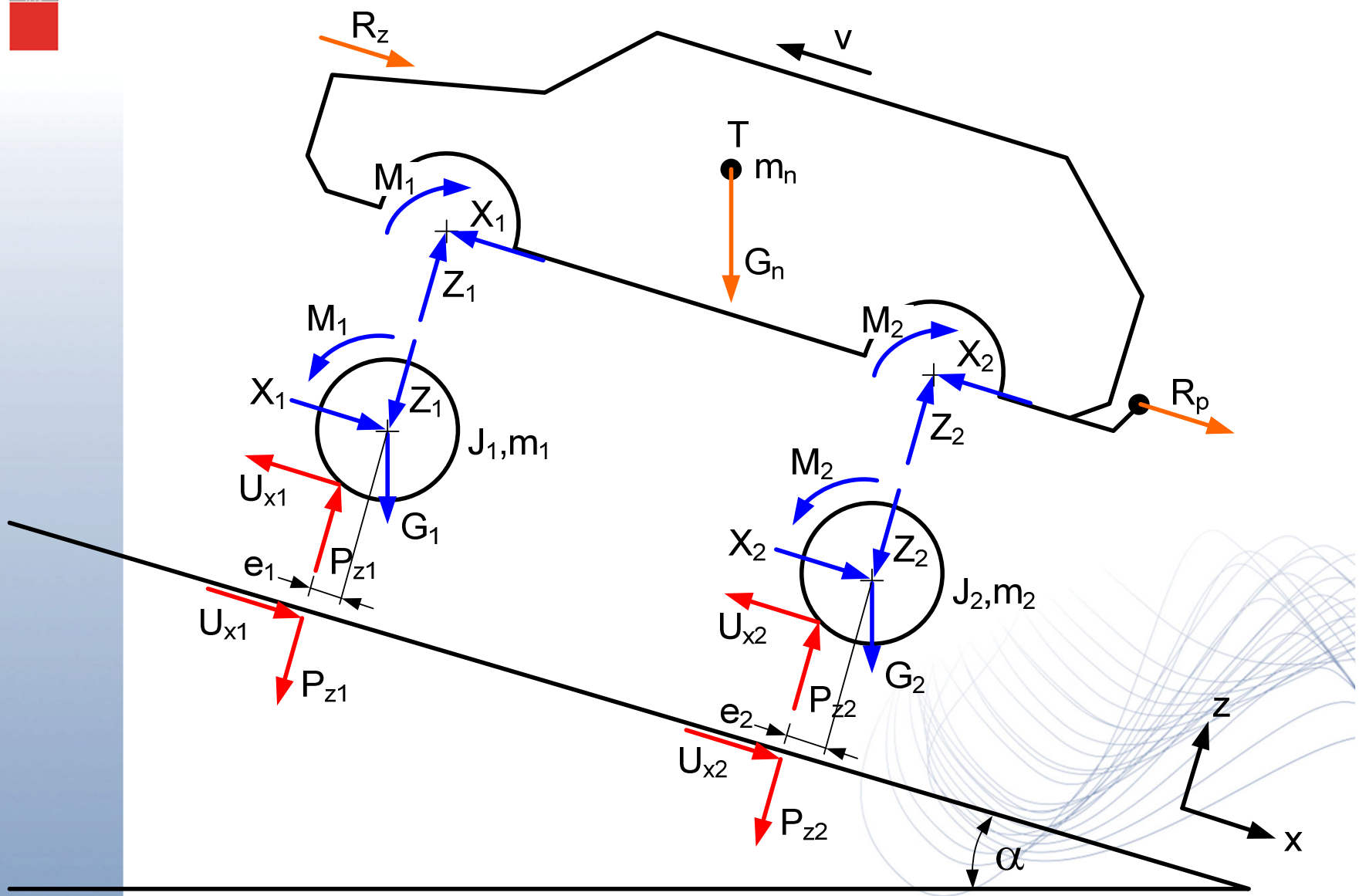

Univerza v Ljubljani
Fakulteta za strojništvo

# System of vehicle‘s equations of balance

## Chassis equatios of motion:

(1) $$\sum F_{x,i} = m_n \cdot \ddot{x}_n = -G_n \cdot \sin\alpha + X_1 + X_2 - R_z - (R_p)$$

(2) $$\sum F_{z,i} = 0 = Z_1 + Z_2 - G_n \cdot \cos\alpha$$

(3) $$\sum M_i = 0 = -(M_1 + M_2) - Z_1 \cdot l'_n + Z_2 \cdot l''_n - X_1 \cdot (h_n - r_{st1}) - X_2 \cdot (h_n - r_{st2}) + \left[R_p \cdot (h_n - h_p)\right]$$

## Font-axle equatios of motion:

(4) $$\sum F_{x,i} = m_1 \cdot \ddot{x}_1 = U_{x1} - X_1 - G_1 \cdot \sin\alpha$$

(5) $$\sum F_{z,i} = 0 = P_{z1} - Z_1 - G_1 \cdot \cos\alpha$$

(6) $$\sum M_i = J_1 \cdot \ddot{\varphi}_1 = M_1 - U_{x1} \cdot r_{st1} - P_{z1} \cdot e_1$$

Univerza v Ljubljani
Fakulteta za strojništvo



# System of vehicle's equations of balance

*Rear-axle equatios of motion:*

(7) $$\sum F_{x,i} = m_2 \cdot \ddot{x}_2 = U_{x2} - X_2 - G_2 \cdot \sin\alpha$$

(8) $$\sum F_{z,i} = 0 = P_{z2} - Z_2 - G_2 \cdot \cos\alpha$$

(9) $$\sum M_i = J_2 \cdot \ddot{\varphi}_2 = M_2 - U_{x2} \cdot r_{st2} - P_{z2} \cdot e_2$$

Univerza v Ljubljani
Fakulteta za strojništvo

# System of vehicle's equations of balance

(2) + (5) + (8): $$P_{z1} + P_{z2} = (G_n + G_1 + G_2) \cdot \cos\alpha$$

$$G_n + G_1 + G_2 = G$$

(6): $$\frac{J_1 \cdot \ddot{\varphi}_1}{r_{st1}} = \frac{M_1}{r_{st1}} - U_{x1} - \underbrace{P_{z1} \cdot \frac{e_1}{r_{st1}}}_{R_{f1}}$$

$$\frac{J_1 \cdot \ddot{\varphi}_1}{r_{st1}} = \frac{M_1}{r_{st1}} - U_{x1} - R_{f1}$$

(9): $$\frac{J_2 \cdot \ddot{\varphi}_2}{r_{st2}} = \frac{M_2}{r_{st2}} - U_{x2} - \underbrace{P_{z2} \cdot \frac{e_2}{r_{st2}}}_{R_{f2}}$$

$$\frac{J_2 \cdot \ddot{\varphi}_2}{r_{st2}} = \frac{M_2}{r_{st2}} - U_{x2} - R_{f2}$$

# Vehicle's equation of motion

(1) + (4) + (6) + (7) + (9):

$$r_{st} \cdot \omega = v_0 < v$$

$$\sigma_t = \frac{v_0 - v}{v_0} \Rightarrow v = \omega \cdot r_d$$

$$\ddot{\varphi}_i = \frac{\ddot{x}_i}{r_{d,i}}; x_n = x_1 = x_2$$

$$m_n + m_1 + m_2 = m = G / g$$

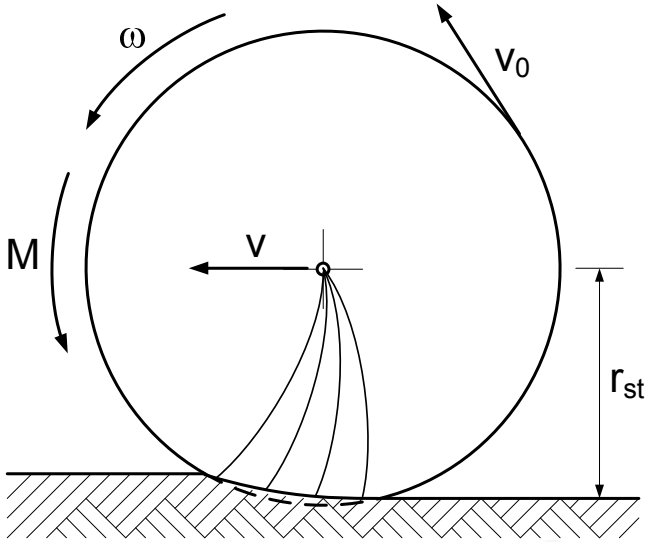


$$\frac{M_1}{r_{st1}} + \frac{M_2}{r_{st2}} = F_{K1} + F_{K2} =$$

$$= \left[ \frac{G}{g} + \frac{J_1}{r_{st1} \cdot r_{d1}} + \frac{J_2}{r_{st2} \cdot r_{d2}} \right] \cdot \ddot{x} + G \cdot \sin\alpha + R_z + \underbrace{R_{f1} + R_{f2}}_{R_f} + (R_p)$$

# Forces and torques on a non-traction wheel

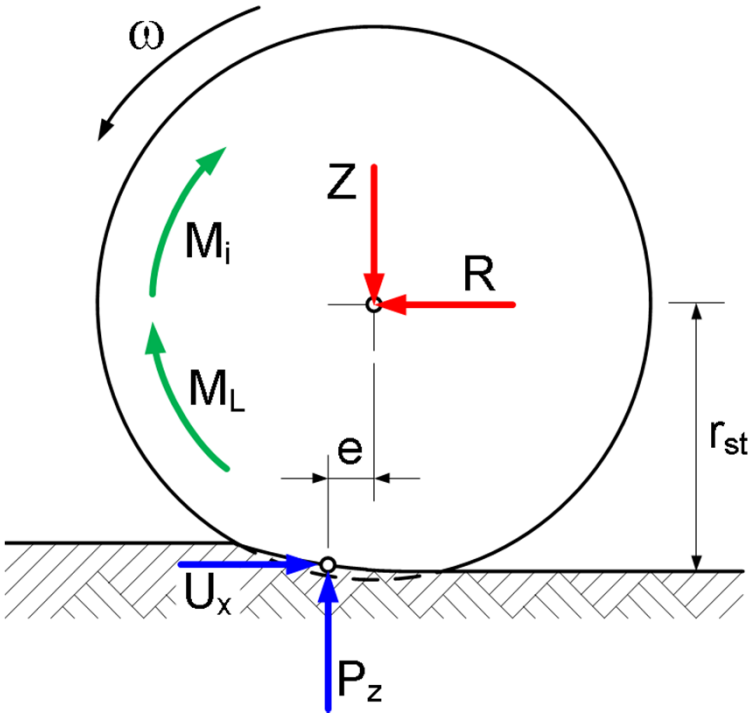


$M_i$… Inertia equivalent torque

$M_L$… Torque losses in bearings, due to ventilation etc.

$$R = U_x = \underbrace{Z \cdot \frac{e}{r_{st}}}_{R_f} + \frac{M_L}{r_{st}} + \frac{M_i}{r_{st}}$$

Univerza v Ljubljani
Fakulteta za strojništvo

# Forces and torques on a traction wheel

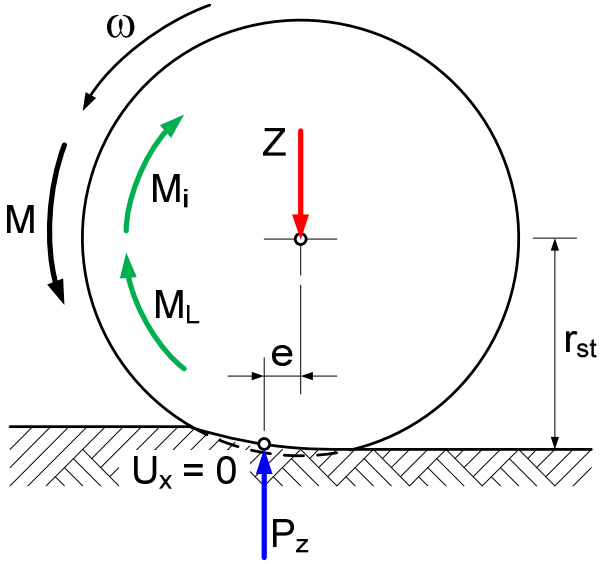


*Driving torque compensates losses:*

$$\frac{M}{r_{st}} = \underbrace{Z \cdot \frac{e}{r_{st}}}_{R_f} + \frac{M_L}{r_{st}} + \frac{M_i}{r_{st}}; U_x = 0$$

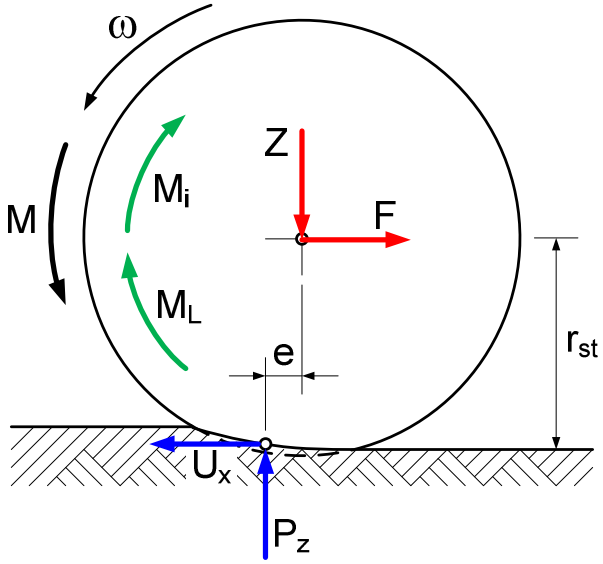


*Driving torque for a traction force:*

$$\frac{M}{r_{st}} = \underbrace{Z \cdot \frac{e}{r_{st}}}_{R_f} + \frac{M_L}{r_{st}} + \frac{M_i}{r_{st}} + F; F = U_x$$

Univerza v Ljubljani
Fakulteta za strojništvo

# Wheel loads for a rear 4x2 drive

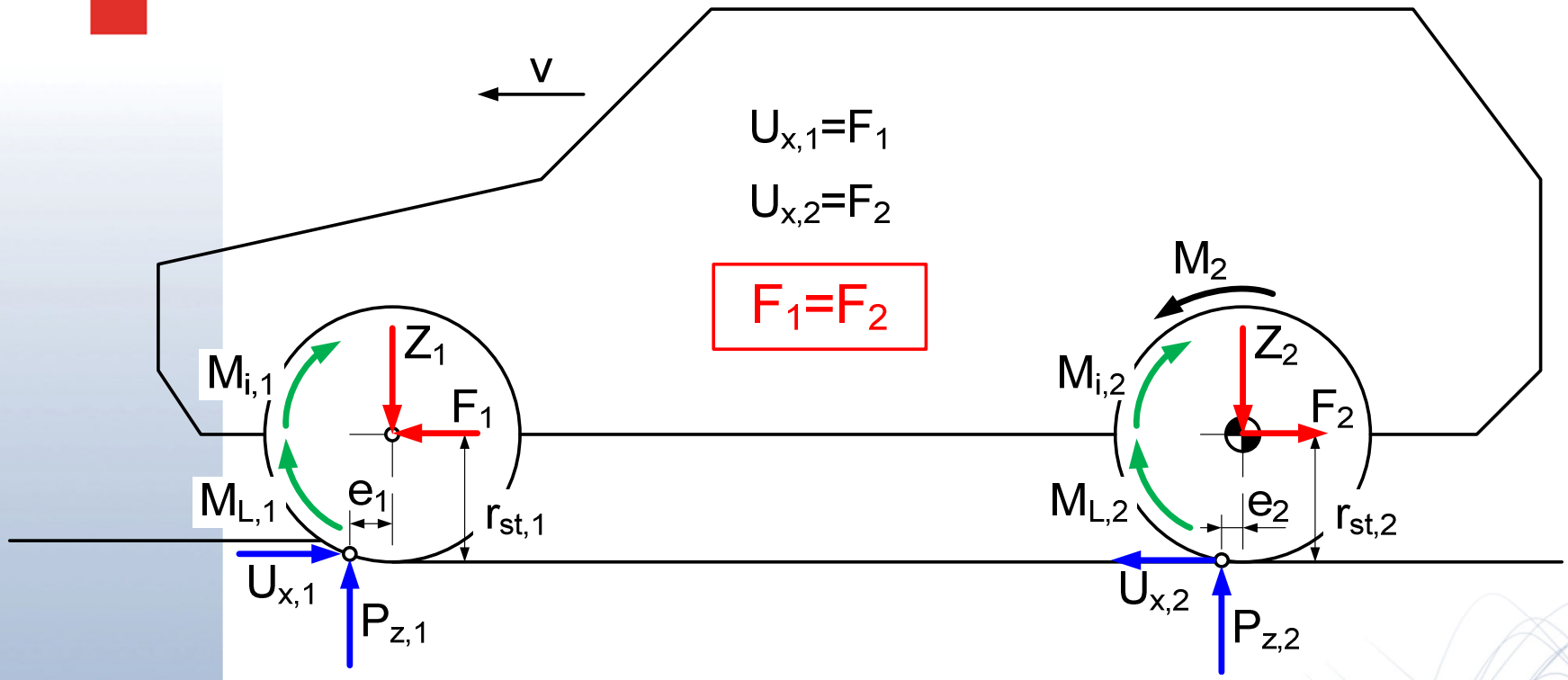


$$R_{f1} > R_{f2}$$

$$F_1 = F_2 > F_{tr,2} = \frac{Z_2}{\mu_{tr}} \Rightarrow zdrs / slip$$

# Wheel loads for a front 4x2 drive

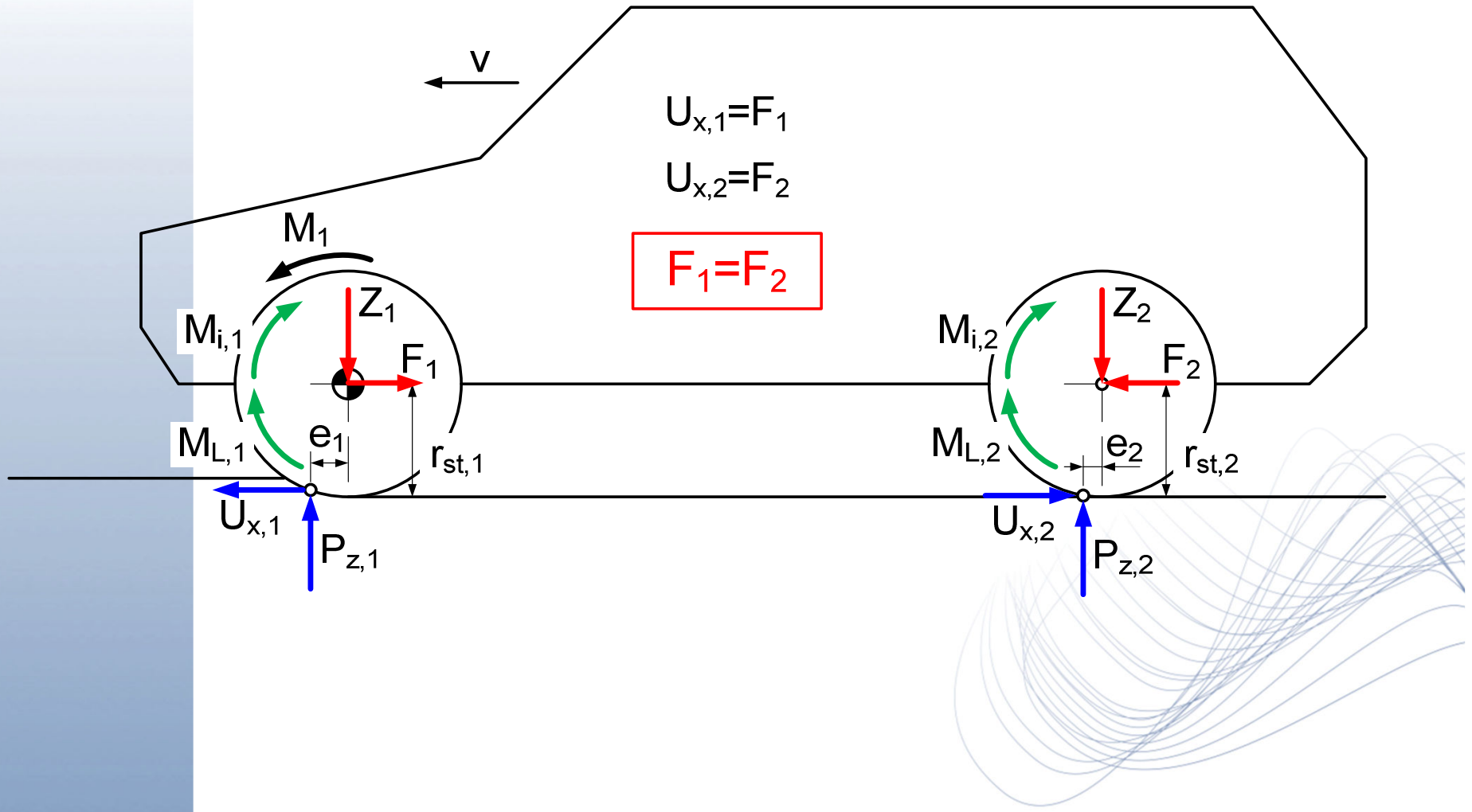

Univerza v Ljubljani
Fakulteta za strojništvo

# Wheel loads for a 4x4 drive

